Forgotten Books

www.forgottenbooks.com

Copyright © 2016 FB &c Ltd.
All rights reserved. No part of this publication may be reproduced, distributed, or transmitted in any form or by any means, including photocopying, recording, or other electronic or mechanical methods, without the prior written permission of the publisher, except in the case of brief quotations embodied in critical reviews and certain other noncommercial uses permitted by copyright law.

WESTINGHOUSE ELECTRIC AND
MANUFACTURING COMPANY,
PITTSBURGH, PENN.

106

TRANSMISSION OF POWER.

POLYPHASE SYSTEM.

TESLA PATENTS.

TRANSMISSION OF POWER.

THE MULTIPHASE OR POLYPHASE SYSTEM.

Tesla Patents.

There are to-day thousands of waterfalls with millions of horse power of energy going to waste for lack of economical means of transporting such power to places of use.

Each horse power of work for ten hours for each working day requires, through a steam engine, about six tons of coal per annum, so that the development and utilization of these inexhaustible sources of power will be equivalent to the saving of millions of tons of coal each year, and will thus assist in solving the problem of conserving our enormous, but exhaustible, fuel supply.

The means for transporting this power and delivering it in suitable form for commercial uses is found in recent applications of electricity. Through the developments already made, electric energy is now available for lighting, for the distribution of power and for heating. The wide extent of its successful application to lighting, and the distribution of power are familiar to every one, and its utilization in heating bids fair to make this method a formidable rival of coal in the vicinity of water powers.

The introduction of successful methods of utilizing these natural sources of power will not only meet the present demands of cities within a suitable radius, but it may be safely predicted that there will be a rapid building up of industries in such localities, and a consequent shifting of centers of population, with also a development of industries which have heretofore lain dormant on account of the cost of power.

When the Westinghouse Electric Company was formed, foreseeing that by alternating currents only could electrical energy be transmitted over long distances, we made the alternating system a specialty, and to that end secured the Gaulard and Gibbs inventions, and many other fundamental ones bearing on this important field, which field had theretofore been considered unworthy of more than

40v1158

experimental attention. Prior to our operations the alternating system had been emphatically condemned as uncommercial by the most eminent engineers of the world, almost without exception; but, in the face of unusual opposition, we succeeded in rapidly introducing a comprehensive system for lighting, which not only proved a successful competitor of other systems, but by its flexibility and adaptation to great distances, has opened up and developed extensive fields which could not otherwise have been occupied. The success of alternating current for lighting led us to seek a solution of the problem of distributing power by the same currents.

In the course of our investigations into the subject of power transmission we came upon the inventions of Mr. Nikola Tesla, now so well known for his remarkable achievements, and recognizing the value and originality of his discoveries, and the fundamental character of his patents, at once secured the exclusive right to manufacture and sell apparatus covered by these patents, with a right to any further inventions Mr. Tesla might make relating thereto. We thereupon immediately began to develop and determine the best forms of apparatus required to solve the problem of power transmission, and we have during the past five years worked unceasingly, and at very great expense, with the result that we are now able to undertake the manufacture of apparatus to meet any case that may be presented to us.

The system we offer is an alternating-current one, now known as the "Multiphase" or "Polyphase System," which is the original discovery of Mr. Tesla, and is so fully covered by his patents that we deem it a duty to those contemplating the use of such apparatus to direct their attention to a selection of Mr. Tesla's patents presented herewith. It is worthy of especial note that the originality of Mr. Tesla's discoveries has not been disputed by any manufacturer of electrical power transmitting apparatus.

WESTINGHOUSE ELECTRIC & MANUFACTURING CO.

Pittsburgh, Pa., January 16th, 1893.

(No Model.) 4 Sheets—Sheet 1.

N. TESLA.

ELECTRO MAGNETIC MOTOR.

No. 381,968. Patented May 1, 1888.

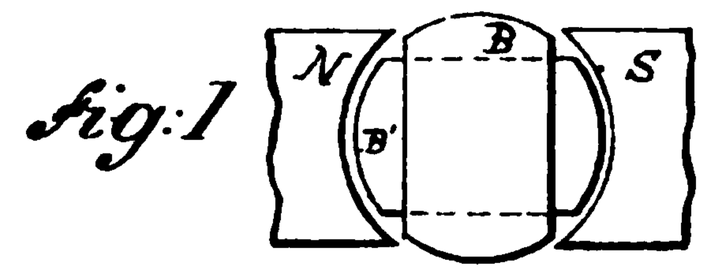

Fig: 1

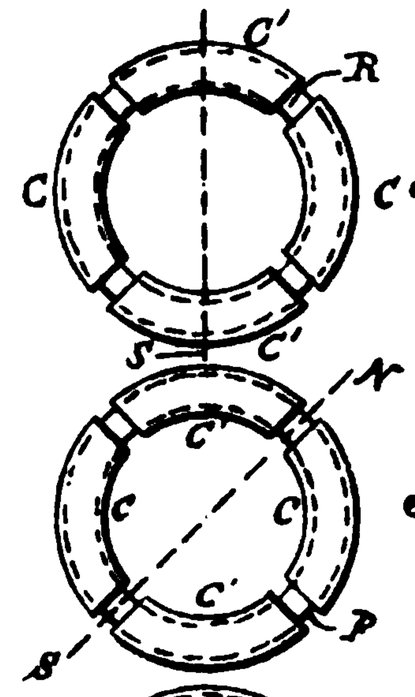

Fig: 1.a

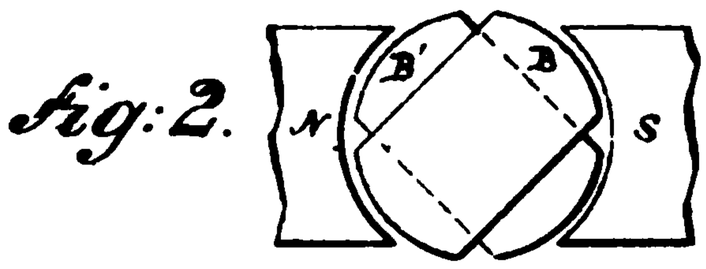

Fig: 2.

Fig: 2.a

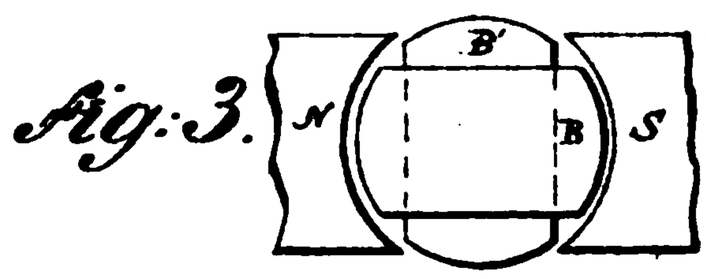

Fig: 3.

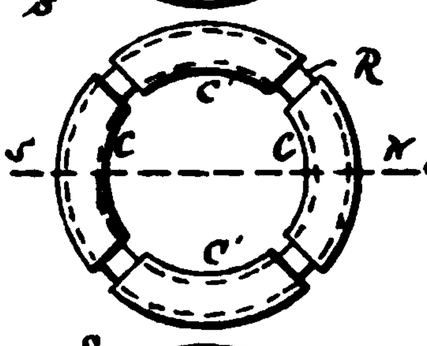

Fig: 3.a

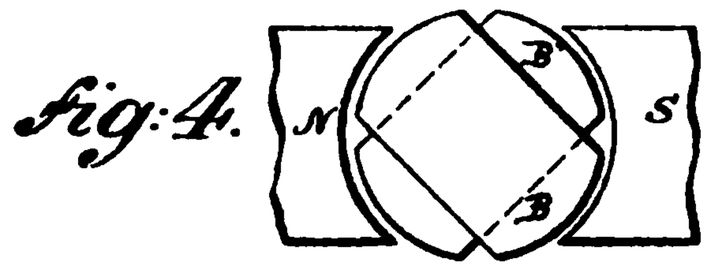

Fig: 4.

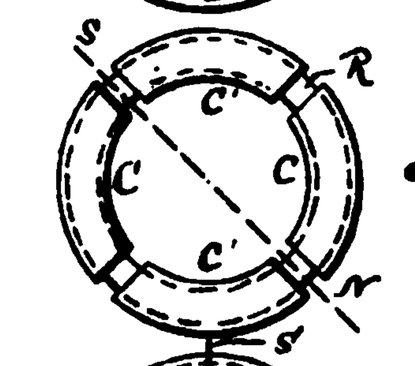

Fig: 4.a

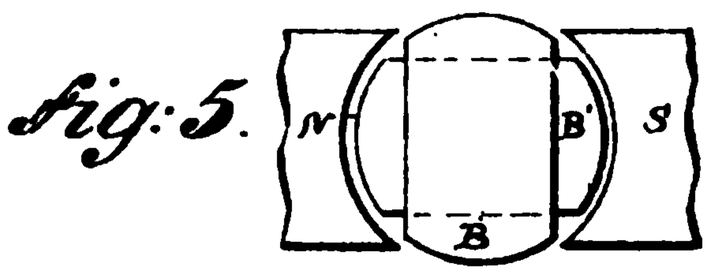

Fig: 5.

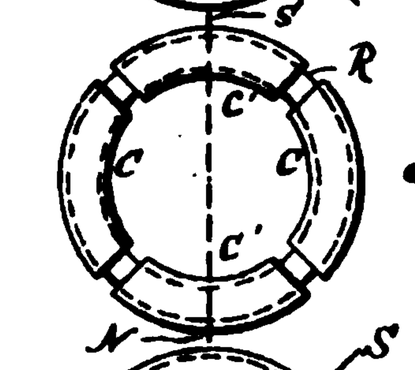

Fig: 5.a

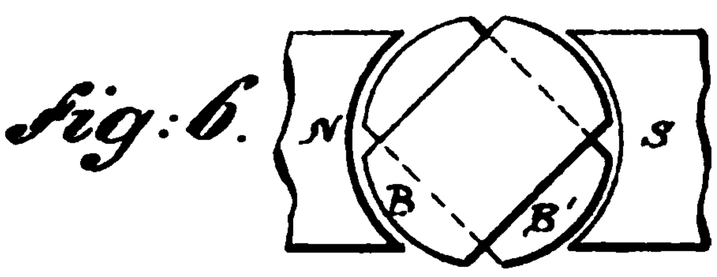

Fig: 6.

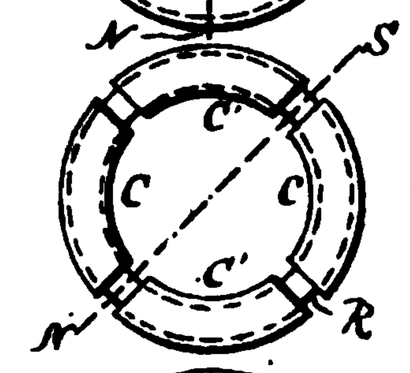

Fig: 6.a

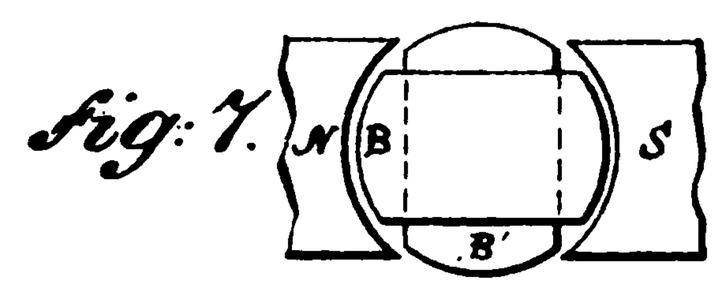

Fig: 7.

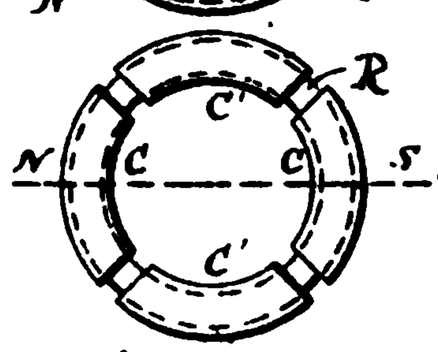

Fig: 7.a

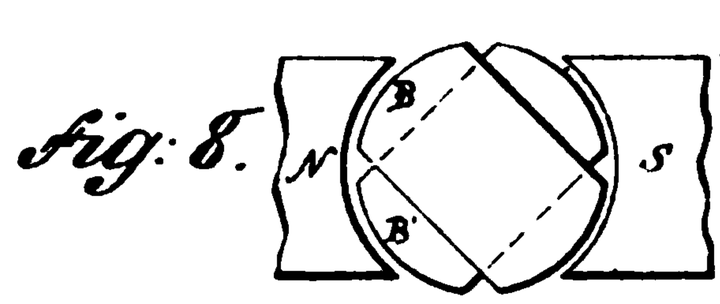

Fig: 8.

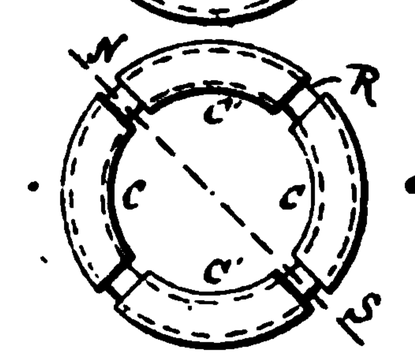

Fig: 8.a

WITNESSES.

Frank E. Hartley
Frank B. Murphy.

INVENTOR.

Nikola Tesla.

BY

Duncan, Curtis & Page

ATTORNEYS.

(No Model.) 4 Sheets—Sheet 2.

N. TESLA.

ELECTRO MAGNETIC MOTOR.

No. 381,968. Patented May 1, 1888.

Fig. 9.

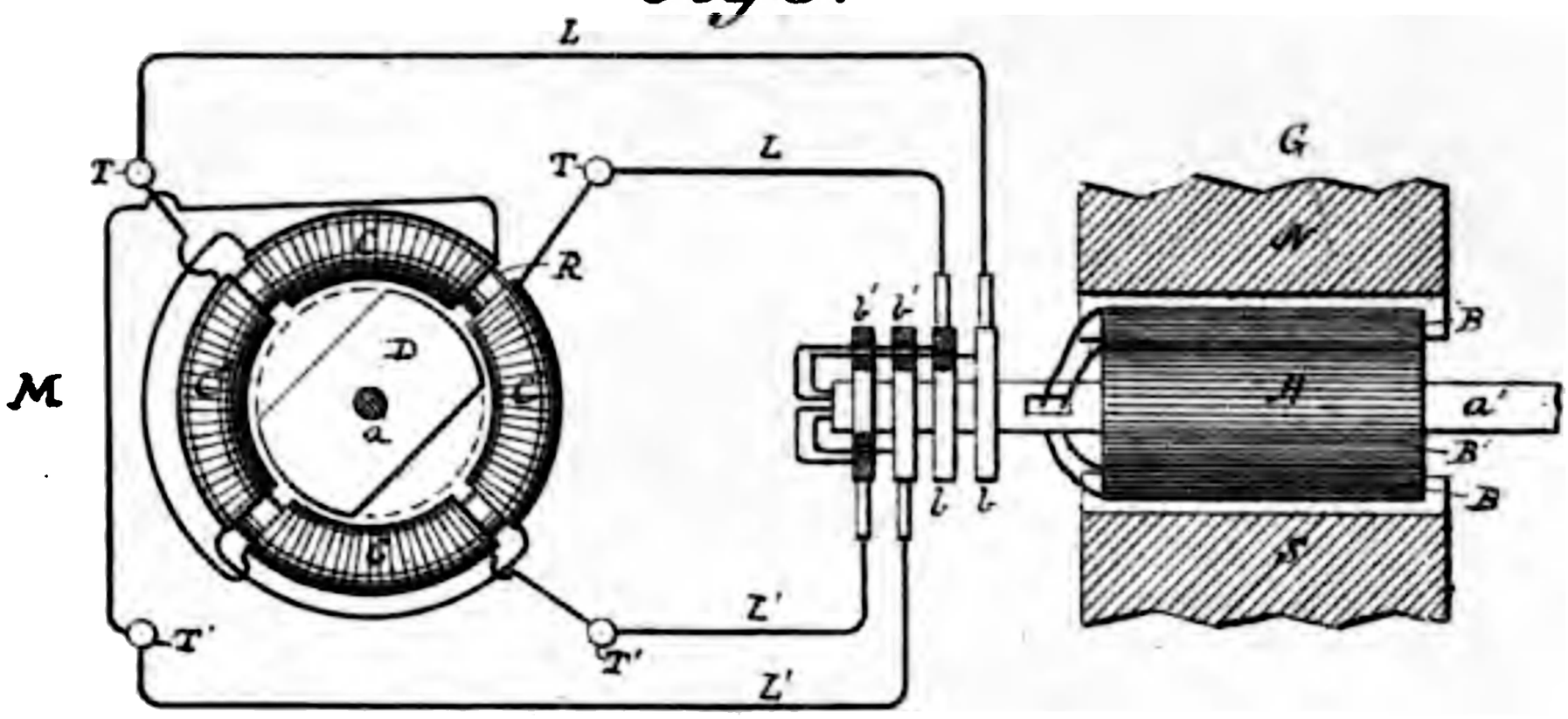

Fig. 10.

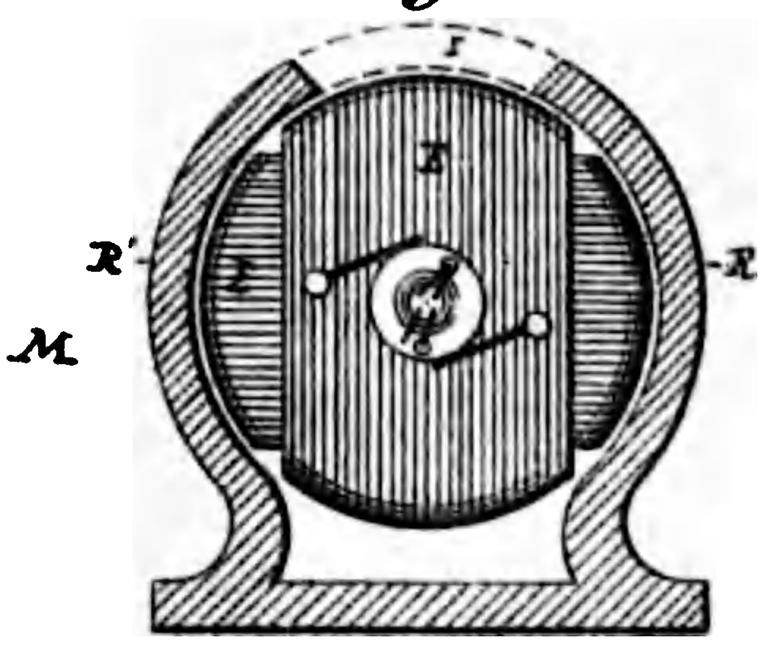

Fig. 11.

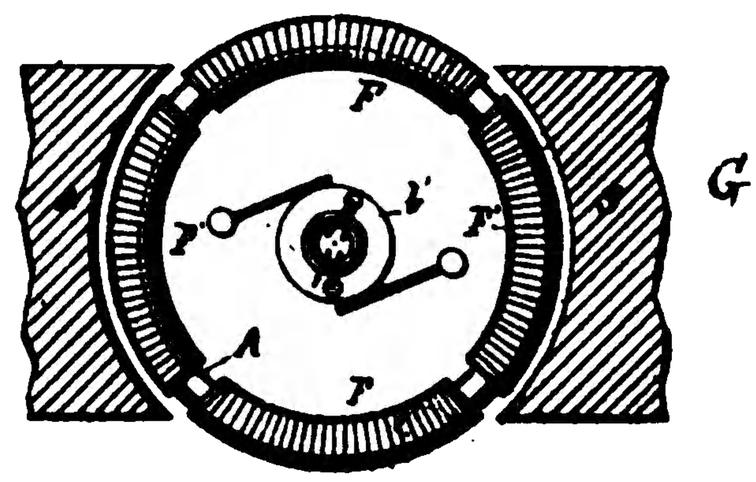

Fig. 12.

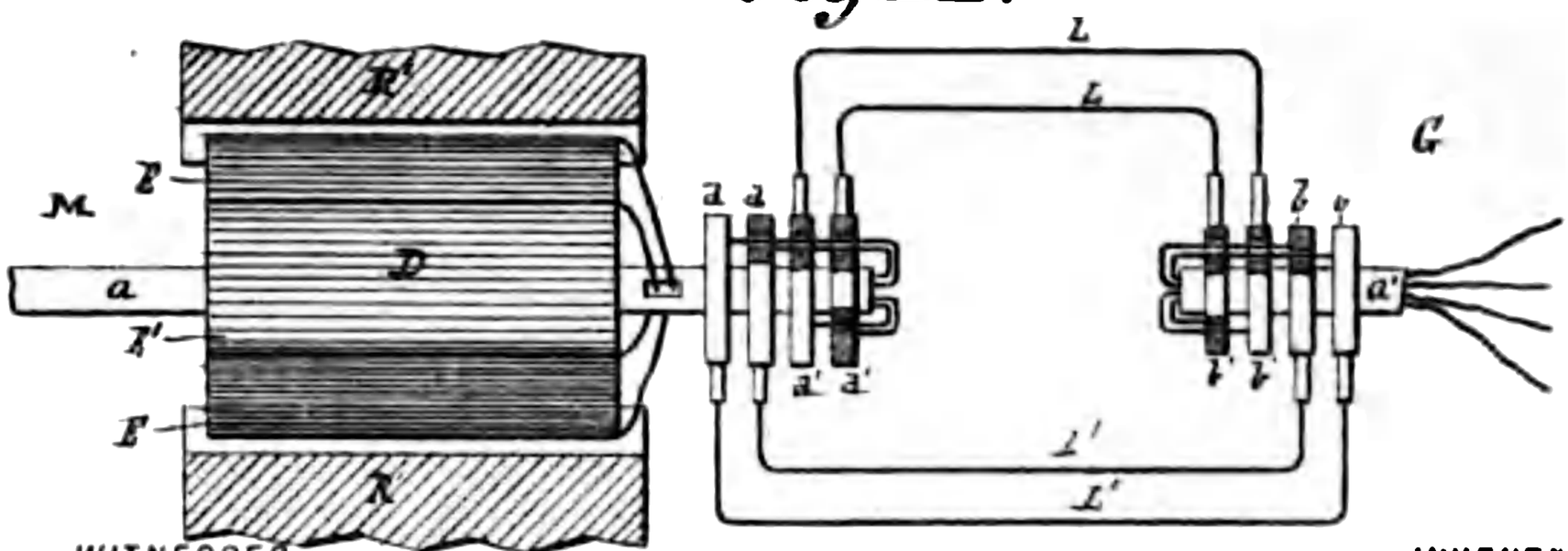

WITNESSES:

Frank E. Hartley.
Frank B. Murphy.

INVENTOR.

Nikola Tesla.

BY

Duncan, Curtis & Page.

ATTORNEYS.

(No Model.) 4 Sheets—Sheet 3.

N. TESLA.

ELECTRO MAGNETIC MOTOR.

No. 381,968. Patented May 1, 1888.

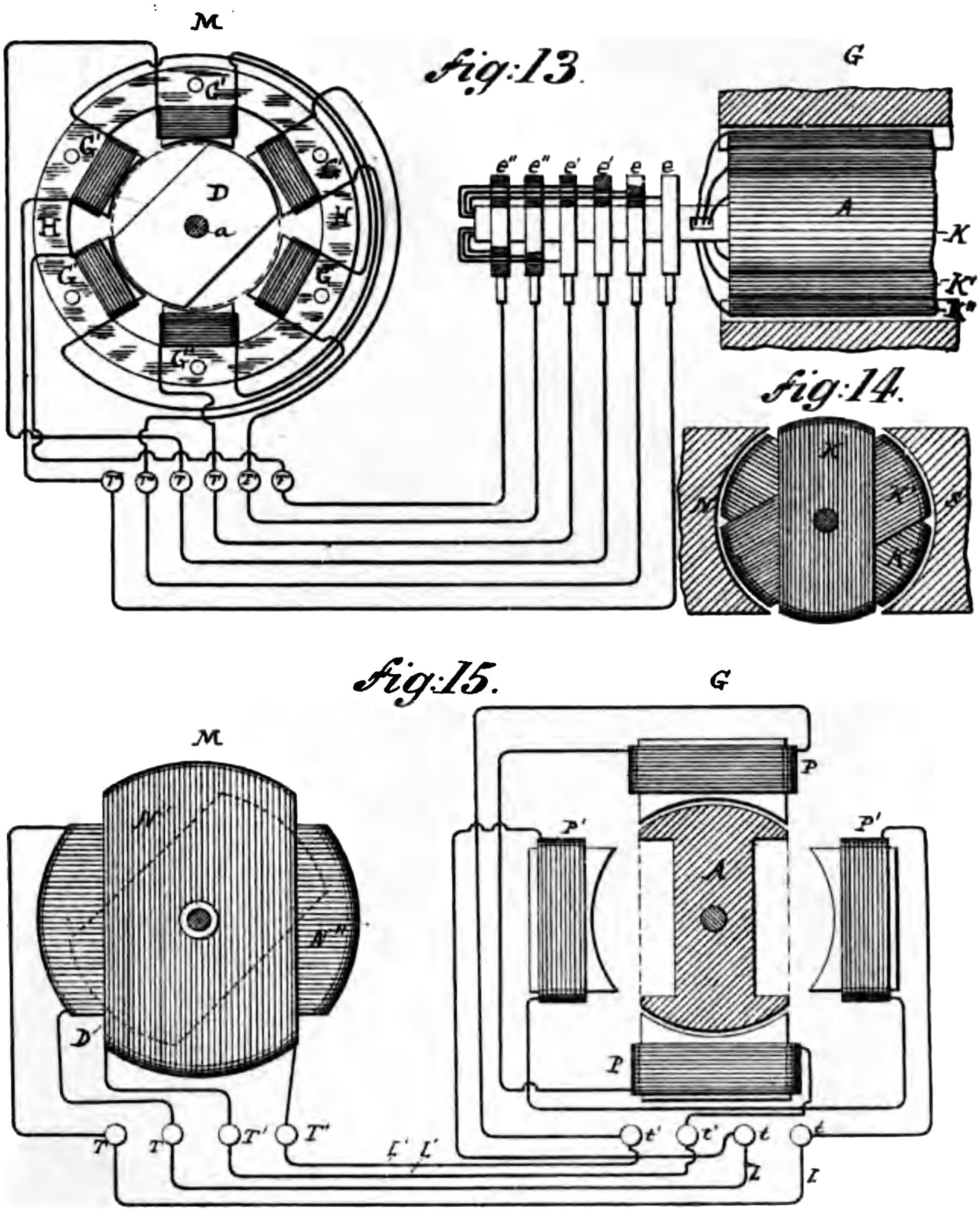

WITNESSES:

Frank E. Hartley.

Frank B. Murphy.

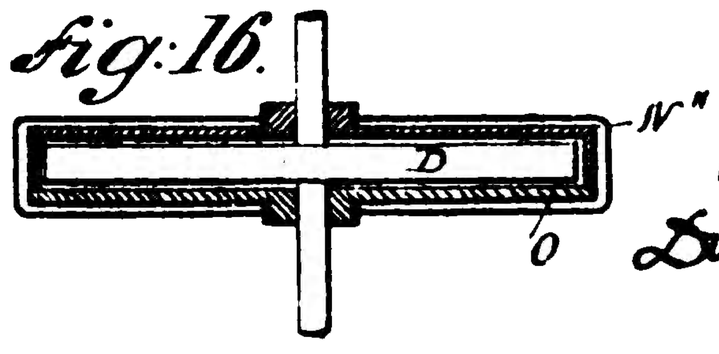

INVENTOR.

Nikola Tesla.

BY

Duncan, Curtis & Page

ATTORNEYS.

(No Model.) 4 Sheets - Sheet 4

N. TESLA.

ELECTRO MAGNETIC MOTOR.

No. 381,968. Patented May 1, 1888.

Fig: 17.

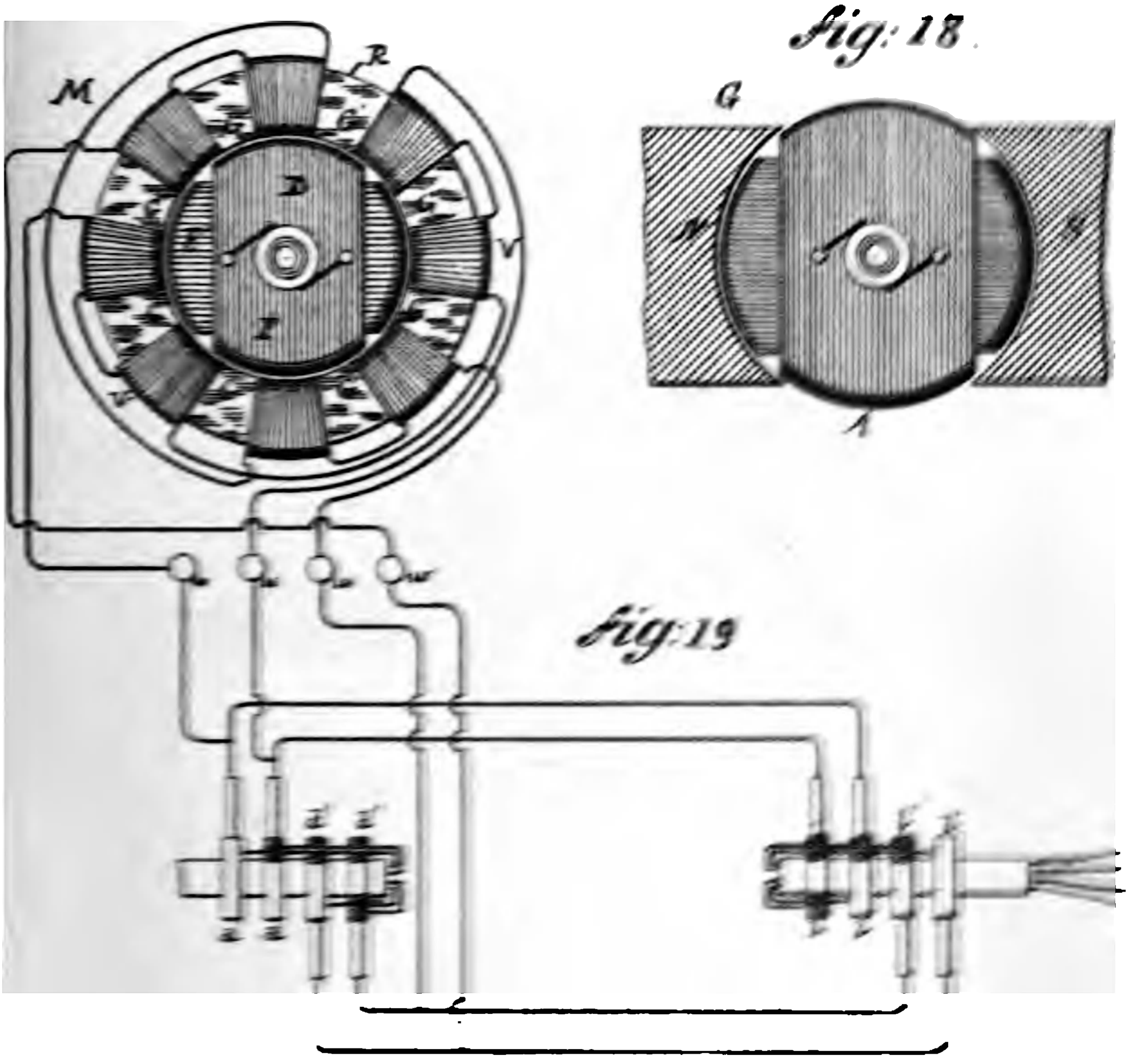

WITNESSES

Frank L. Dyer
Chas. B. Mannix

INVENTOR

Nikola Tesla,
by Dyer & Tibbitts
Attys.

PUBLIC LIBRARY

UNITED STATES PATENT OFFICE.

NIKOLA TESLA, OF NEW YORK, N. Y., ASSIGNOR OF ONE-HALF TO CHARLES F. PECK, OF ENGLEWOOD, NEW JERSEY.

ELECTRO-MAGNETIC MOTOR.

SPECIFICATION forming part of Letters Patent No. 381,968, dated May 1, 1888.

Application filed October 12, 1887. Serial No. 252,132. (No model.)

To all whom it may concern:

Be it known that I, NIKOLA TESLA, from Smiljan Lika, border country of Austria-Hungary, residing at New York, N. Y., have invented certain new and useful Improvements in Electro-Magnetic Motors, of which the following is a specification, reference being had to the drawings accompanying and forming a part of the same.

The practical solution of the problem of the electrical conversion and transmission of mechanical energy involves certain requirements which the apparatus and systems heretofore employed have not been capable of fulfilling. Such a solution, primarily, demands a uniformity of speed in the motor irrespective of its load within its normal working limits. On the other hand, it is necessary, to attain a greater economy of conversion than has heretofore existed, to construct cheaper and more reliable and simple apparatus, and, lastly, the apparatus must be capable of easy management, and such that all danger from the use of currents of high tension, which are necessary to an economical transmission, may be avoided.

My present invention is directed to the production and improvement of apparatus capable of more nearly meeting these requirements than those heretofore available, and though I have described various means for the purpose, they involve the same main principles of construction and mode of operation, which may be described as follows: A motor is employed in which there are two or more independent circuits through which alternate currents are passed at proper intervals, in the manner hereinafter described, for the purpose of effecting a progressive shifting of the magnetism or of the "lines of force" in accordance with the well-known theory, and a consequent action of the motor. It is obvious that a proper progressive shifting of the lines of force may be utilized to set up a movement or rotation of either element of the motor, the armature, or the field-magnet, and that if the currents directed through the several circuits of the motor are in the proper direction no commutator for the motor will be required; but to avoid all the usual commutating appliances in the system I prefer to connect the motor-circuits directly with those of a suitable alternate-current generator. The practical results of such a system, its economical advantages, and the mode of its construction and operation will be described more in detail by reference to the accompanying diagrams and drawings.

Figures 1 to 8 and 1ª to 8ª, inclusive, are diagrams illustrating the principle of the action of my invention. The remaining figures are views of the apparatus in various forms by means of which the invention may be carried into effect, and which will be described in their order.

Referring first to Fig. 9, which is a diagrammatic representation of a motor, a generator, and connecting-circuits in accordance with my invention, M is the motor, and G the generator for driving it. The motor comprises a ring or annulus, R, preferably built up of thin insulated iron rings or annular plates, so as to be as susceptible as possible to variations in its magnetic condition. This ring is surrounded by four coils of insulated wire symmetrically placed, and designated by C C C′ C′. The diametrically-opposite coils are connected up so as to co-operate in pairs in producing free poles on diametrically-opposite parts of the ring. The four free ends thus left are connected to terminals T T T′ T′, as indicated. Near the ring, and preferably inside of it, there is mounted on an axis or shaft, *a*, a magnetic disk, D, generally circular in shape, but having two segments cut away, as shown. This disk is mounted so as to turn freely within the ring R. The generator G is of any ordinary type, that shown in the present instance having field-magnets N S and a cylindrical armature-core, A, wound with the two coils B B′. The free ends of each coil are carried through the shaft *a′* and connected, respectively, to insulated contact-rings *b b b′ b′*. Any convenient form of collector or brush bears on each ring and forms a terminal by which the current to and from a ring is conveyed. These terminals are connected to the terminals of the motor by the wires L and L′ in the manner indicated, whereby two complete circuits are formed—one including, say, the coils B of

the generator C′ C′ of the motor, and the other the remaining coils B′ and C C of the generator and the motor.

It remains now to explain the mode of operation of this system, and for this purpose I refer to the diagrams, Figs. 1 to 8, and 1ª to 8ª, for an illustration of the various phases through which the coils of the generator pass when in operation, and the corresponding and resultant magnetic changes produced in the motor. The revolution of the armature of the generator between the field-magnets N S obviously produces in the coils B B′ alternating currents, the intensity and direction of which depend upon well-known laws. In the position of the coils indicated in Fig. 1 the current in the coil B is practically *nil*, whereas the coil B′ at the same time is developing its maximum current, and by the means indicated in the description of Fig. 9 the circuit including this coil B′ may also include, say, the coils C C of the motor, Fig. 1ª. The result, with the proper connections, would be the magnetization of the ring R′, the poles being on the line N S. The same order of connections being observed between the coil B and the coils C′, the latter, when traversed by a current, tend to fix the poles at right angles to the line N S of Fig. 1ª. It results, therefore, that when the generator-coils have made one eighth of a revolution, reaching the position shown in Fig. 2, both pairs of coils C and C′ will be traversed by currents and act in opposition, in so far as the location of the poles is concerned. The position of the poles will therefore be the resultant of the magnetizing forces of the coils—that is to say, it will advance along the ring to a position corresponding to one-eighth of the revolution of the armature of the generator. In Fig. 3 the armature of the generator has progressed to one quarter of a revolution. At the point indicated the current in the coil B is maximum, while in B′ it is *nil*, the latter coil being in its neutral position. The poles of the ring R in Fig. 3ª will, in consequence, be shifted to a position ninety degrees from that at the start, as shown. I have in like manner shown the conditions existing at each successive eighth of one revolution in the remaining figures. A short reference to these figures will suffice for an understanding of their significance. Figs. 4 and 4ª illustrate the conditions which exist when the generator-armature has completed three eighths of a revolution. Here both coils are generating current; but the coil B′, having now entered the opposite field, is generating a current in the opposite direction, having the opposite magnetizing effect; hence the resultant pole will be on the line N S, as shown. In Fig. 5 one-half of one revolution of the armature of the generator has been completed, and the resulting magnetic condition of the ring is shown in Fig. 5ª. In this phase coil B is in the neutral position while coil B′ is generating its maximum current, which is in the same direction as in Fig. 4. The poles will consequently be shifted through one half of the ring. In Fig. 6 the armature has completed five-eighths of a revolution. In this position coil B′ develops a less powerful current, but in the same direction as before. The coil B, on the other hand, having entered a field of opposite polarity, generates a current of opposite direction. The resultant poles will therefore be in the line N S, Fig. 6ª, or, in other words, the poles of the ring will be shifted along five-eighths of its periphery. Figs. 7 and 7ª in the same manner illustrate the phases of the generator and ring at three-quarters of a revolution, and Figs. 8 and 8ª the same at seven-eighths of a revolution of the generator-armature. These figures will be readily understood from the foregoing. When a complete revolution is accomplished, the conditions existing at the start are re-established and the same action is repeated for the next and all subsequent revolutions, and, in general, it will now be seen that every revolution of the armature of the generator produces a corresponding shifting of the poles or lines of force around the ring. This effect I utilize in producing the rotation of a body or armature in a variety of ways—for example, applying the principle above described to the apparatus shown in Fig. 9. The disk D, owing to its tendency to assume that position in which it embraces the greatest possible number of the magnetic lines, is set in rotation, following the motion of the lines or the points of greatest attraction.

The disk D in Fig. 9 is shown as cut away on opposite sides; but this, I have found, is not essential to effecting its rotation, as a circular disk, as indicated by dotted lines, is also set in rotation. This phenomenon I attribute to a certain inertia or resistance inherent in the metal to the rapid shifting of the lines of force through the same, which results in a continuous tangential pull upon the disk, causing its rotation. This seems to be confirmed by the fact that a circular disk of steel is more effectively rotated than one of soft iron, for the reason that the former is assumed to possess a greater resistance to the shifting of the magnetic lines.

In illustration of other forms of my invention, I shall now describe the remaining figures of the drawings.

Fig. 10 is a view in elevation and part vertical section of a motor. Fig. 12 is a top view of the same with the field in section and a diagram of connections. Fig. 11 is an end or side view of a generator with the fields in section. This form of motor may be used in place of that shown above. D is a cylindrical or drum-armature core, which, for obvious reasons, should be split up as far as practicable to prevent the circulation within it of currents of induction. The core is wound longitudinally with two coils, E and E′, the ends of which are respectively connected to insulated contact-rings *d d d′ d′*, carried by the shaft *a*, upon which the armature is mounted. The armature is set to revolve within an iron shell, R

which constitutes the field-magnet, or other element of the motor. This shell is preferably formed with a slot or opening, *r*, but it may be continuous, as shown by the dotted lines, and in this event it is preferably made of steel. It is also desirable that this shell should be divided up similarly to the armature and for similar reasons. As a generator for driving this motor I may use the device shown in Fig. 11. This represents an annular or ring armature, A, surrounded by four coils, F F F′ F′, of which those diametrically opposite are connected in series, so that four free ends are left, which are connected to the insulated contact-rings *b b b′ b′*. The ring is suitably mounted on a shaft, *a′*, between the poles N S. The contact-rings of each pair of generator-coils are connected to these of the motor, respectively, by means of contact-brushes and the two pairs of conductors L L and L′ L′, as indicated diagrammatically in Fig. 12. Now it is obvious from a consideration of the preceding figures that the rotation of the generator-ring produces currents in the coils F F′, which, being transmitted to the motor-coils, impart to the core of the latter magnetic poles constantly shifting or whirling around the core. This effect sets up a rotation of the armature owing to the attractive force between the shell and the poles of the armature, but inasmuch as the coils in this case move relative to the shell or field-magnet the movement of the coils is in the opposite direction to the progressive shifting of the poles.

Other arrangements of the coils of both generator and motor are possible, and a greater number of circuits may be used, as will be seen in the two succeeding figures.

Fig. 13 is a diagrammatic illustration of a motor and a generator constructed and connected in accordance with my invention. Fig. 14 is an end view of the generator with its field-magnets in section. The field of the motor M is produced by six magnetic poles, G′ G′, secured to or projecting from a ring or frame, H. These magnets or poles are wound with insulated coils, those diametrically opposite to each other being connected in pairs so as to produce opposite poles in each pair. This leaves six free ends, which are connected to the terminals T T T′ T′ T″ T″. The armature, which is mounted to rotate between the poles, is a cylinder or disk, D, of wrought-iron, mounted on the shaft *a*. Two segments of the same are cut away, as shown. The generator for this motor has in this instance an armature, A, wound with three coils, K K′ K″, at sixty degrees apart. The ends of these coils are connected, respectively, to insulated contact-rings *e e e′ e′ e″ e″*. These rings are connected to those of the motor in proper order by means of collecting-brushes and six wires, forming three independent circuits. The variations in the strength and direction of the currents transmitted through these circuits and traversing the coils of the motor produce a steadily-progressive shifting of the resultant attractive force exerted by the poles G′ upon the armature D, and consequently keep the armature rapidly rotating. The peculiar advantage of this disposition is in obtaining a more concentrated and powerful field. The application of this principle to systems involving multiple circuits generally will be understood from this apparatus.

Referring, now, to Figs. 15 and 16, Fig. 15 is a diagrammatic representation of a modified disposition of my invention. Fig. 16 is a horizontal cross section of the motor. In this case a disk, D, of magnetic metal, preferably cut away at opposite edges, as shown in dotted lines in Fig. 15, is mounted so as to turn freely inside two stationary coils, N′ N″, placed at right angles to one another. The coils are preferably wound on a frame, O, of insulating material, and their ends are connected to the fixed terminals T T T′ T′. The generator G is a representative of that class of alternating-current machines in which a stationary induced element is employed. That shown consists of a revolving permanent or electro magnet, A, and four independent stationary magnets, P P′, wound with coils, those diametrically opposite to each other being connected in series and having their ends secured to the terminals *t t t′ t′*. From these terminals the currents are led to the terminals of the motor, as shown in the drawings. The mode of operation is substantially the same as in the previous cases, the currents traversing the coils of the motor having the effect to turn the disk D. This mode of carrying out the invention has the advantage of dispensing with the sliding contacts in the system.

In the forms of motor above described only one of the elements, the armature or the field-magnet, is provided with energizing-coils. It remains, then, to show how both elements may be wound with coils. Reference is therefore had to Figs. 17, 18, and 19. Fig. 17 is an end view of such a motor. Fig. 18 is a similar view of the generator with the field-magnets in section, and Fig. 19 is a diagram of the circuit-connections. In Fig. 17 the field-magnet of the motor consists of a ring, R, preferably of thin insulated iron sheets or bands with eight pole pieces, G′, and corresponding recesses, in which four pairs of coils, V, are wound. The diametrically opposite pairs of coils are connected in series and the free ends connected to four terminals, *w*, the rule to be followed in connecting being the same as hereinbefore explained. An armature, D, with two coils, E E′, at right angles to each other, is mounted to rotate in side of the field-magnet R. The ends of the armature-coils are connected to two pairs of contact-rings, *d d d′ d′*, Fig. 19. The generator for this motor may be of any suitable kind to produce currents of the desired character. In the present instance it consists of a field-magnet, N S, and an armature, A, with two coils at right angles, the ends of which are connected to four contact-rings, *b b b′ b′*, carried by its shaft. The circuit-connections are as

tablished between the rings on the generator-shaft and those on the motor-shaft by collecting brushes and wires, as previously explained. In order to properly energize the field-magnet of the motor, however, the connections are so made with the armature coils or wires leading thereto that while the points of greatest attraction or greatest density of magnetic lines of force upon the armature are shifted in one direction those upon the field-magnet are made to progress in an opposite direction. In other respects the operation is identically the same as in the other cases cited. This arrangement results in an increased speed of rotation. In Figs. 17 and 19, for example, the terminals of each set of field-coils are connected with the wires to the two armature-coils in such way that the field-coils will maintain opposite poles in advance of the poles of the armature.

In the drawings the field-coils are in shunts to the armature, but they may be in series or in independent circuits.

It is obvious that the same principle may be applied to the various typical forms of motor hereinbefore described.

Having now described the nature of my invention and some of the various ways in which it is or may be carried into effect, I would call attention to certain characteristics which the applications of the invention possess and the advantages which the invention secures.

In my motor, considering for convenience that represented in Fig. 9, it will be observed that since the disk D has a tendency to follow continuously the points of greatest attraction, and since these points are shifted around the ring once for each revolution of the armature of the generator, it follows that the movement of the disk D will be synchronous with that of the armature A. This feature by practical demonstrations I have found to exist in all other forms in which one revolution of the armature of the generator produces a shifting of the poles of the motor through three hundred and sixty degrees.

In the particular construction shown in Fig. 15, or in others constructed on a similar plan, the number of alternating impulses resulting from one revolution of the generator armature is double as compared with the preceding cases, and the polarities in the motor are shifted around twice by one revolution of the generator-armature. The speed of the motor will, therefore, be twice that of the generator. The same result is evidently obtained by such a disposition as that shown in Fig. 17, where the poles of both elements are shifted in opposite directions.

Again, considering the apparatus illustrated by Fig. 9 as typical of the invention, it is obvious that since the attractive effect upon the disk D is greatest when the disk is in its proper relative position to the poles developed in the ring R—that is to say, when its ends or poles immediately follow those of the ring—the speed of the motor for all the loads within the normal working limits of the motor will be practically constant. It is clearly apparent that the speed can never exceed the arbitrary limit as determined by the generator, and also that within certain limits at least the speed of the motor will be independent of the strength of the current.

It will now be more readily seen from the above description how far the requirements of a practical system of electrical transmission of power are realized in my invention. I secure, first, a uniform speed under all loads within the normal working limits of the motor without the use of any auxiliary regulator; second, synchronism between the motor and generator; third, greater efficiency by the more direct application of the current, no commutating devices being required on either the motor or generator; fourth, cheapness and simplicity of mechanical construction and economy in maintenance; fifth, the capability of being very easily managed or controlled; and, sixth, diminution of danger from injury to persons and apparatus.

These motors may be run in series, multiple arc or multiple series, under conditions well understood by those skilled in the art.

The means or devices for carrying out the principle may be varied to a far greater extent than I have been able to indicate; but I regard as within my invention, and I desire to secure by Letters Patent in general, motors containing two or more independent circuits through which the operating-currents are led in the manner described. By "independent" I do not mean to imply that the circuits are necessarily isolated from one another, for in some instances there might be electrical connections between them to regulate or modify the action of the motor without necessarily producing a new or different action.

I am aware that the rotation of the armature of a motor wound with two energizing-coils at right angles to each other has been effected by an intermittent shifting of the energizing effect of both coils through which a direct current by means of mechanical devices has been transmitted in alternately-opposite directions; but this method or plan I regard as absolutely impracticable for the purposes for which my invention is designed—at least on any extended scale—for the reasons, mainly, that a great waste of energy is necessarily involved unless the number of energizing-circuits is very great, and that the interruption and reversal of a current of any considerable strength by means of any known mechanical devices is a matter of the greatest difficulty and expense.

In this application I do not claim the method of operating motors which is herein involved, having made separate application for such method.

I therefore claim the following:

1. The combination, with a motor containing separate or independent circuits on the armature or field-magnet, or both, of an alternating-current generator containing induced

circuits connected independently to corresponding circuits in the motor, whereby a rotation of the generator produces a progressive shifting of the poles of the motor, as herein described.

2. In a system for the electrical transmission of power, the combination of a motor provided with two or more independent magnetizing-coils and an alternating-current generator containing induced coils corresponding to the motor-coils, and circuits connecting directly the motor and generator coils in such order that the currents developed by the generator will be passed through the corresponding motor-coils, and thereby produce a progressive shifting of the poles of the motor, as herein set forth.

3. The combination, with a motor having an annular or ring-shaped field-magnet and a cylindrical or equivalent armature, and independent coils on the field-magnet or armature, or both, of an alternating-current generator having correspondingly independent coils, and circuits including the generator-coils and corresponding motor coils in such manner that the rotation of the generator causes a progressive shifting of the poles of the motor in the manner set forth.

4. In a system for the electrical transmission of power, the combination of the following instrumentalities, to wit: a motor composed of a disk or its equivalent mounted within a ring or annular field-magnet, which is provided with magnetizing-coils connected in diametrically-opposite pairs or groups to independent terminals, a generator having induced coils or groups of coils equal in number to the pairs or groups of motor-coils, and circuits connecting the terminals of said coils to the terminals of the motor, respectively, and in such order that the rotation of the generator and the consequent production of alternating currents in the respective circuits produces a progressive shifting of the poles of the motor, as hereinbefore described.

NIKOLA TESLA.

Witnesses:
FRANK E. HARTLEY,
FRANK B. MURPHY.

(No Model.) 2 Sheets—Sheet 1.

N. TESLA.

ELECTRO MAGNETIC MOTOR.

No. 381,969 Patented May 1, 1888.

Fig: 1.

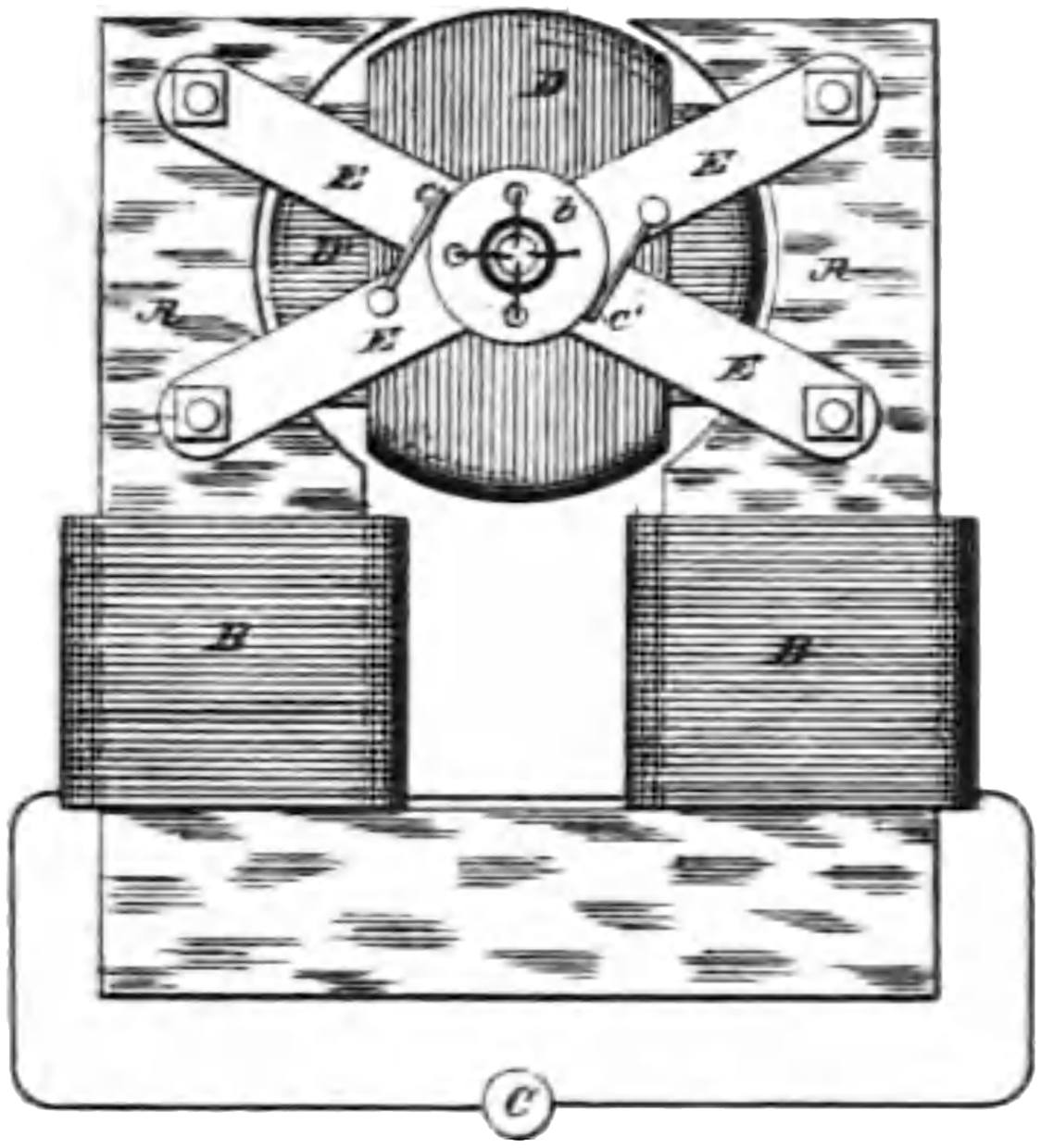

Fig: 2.

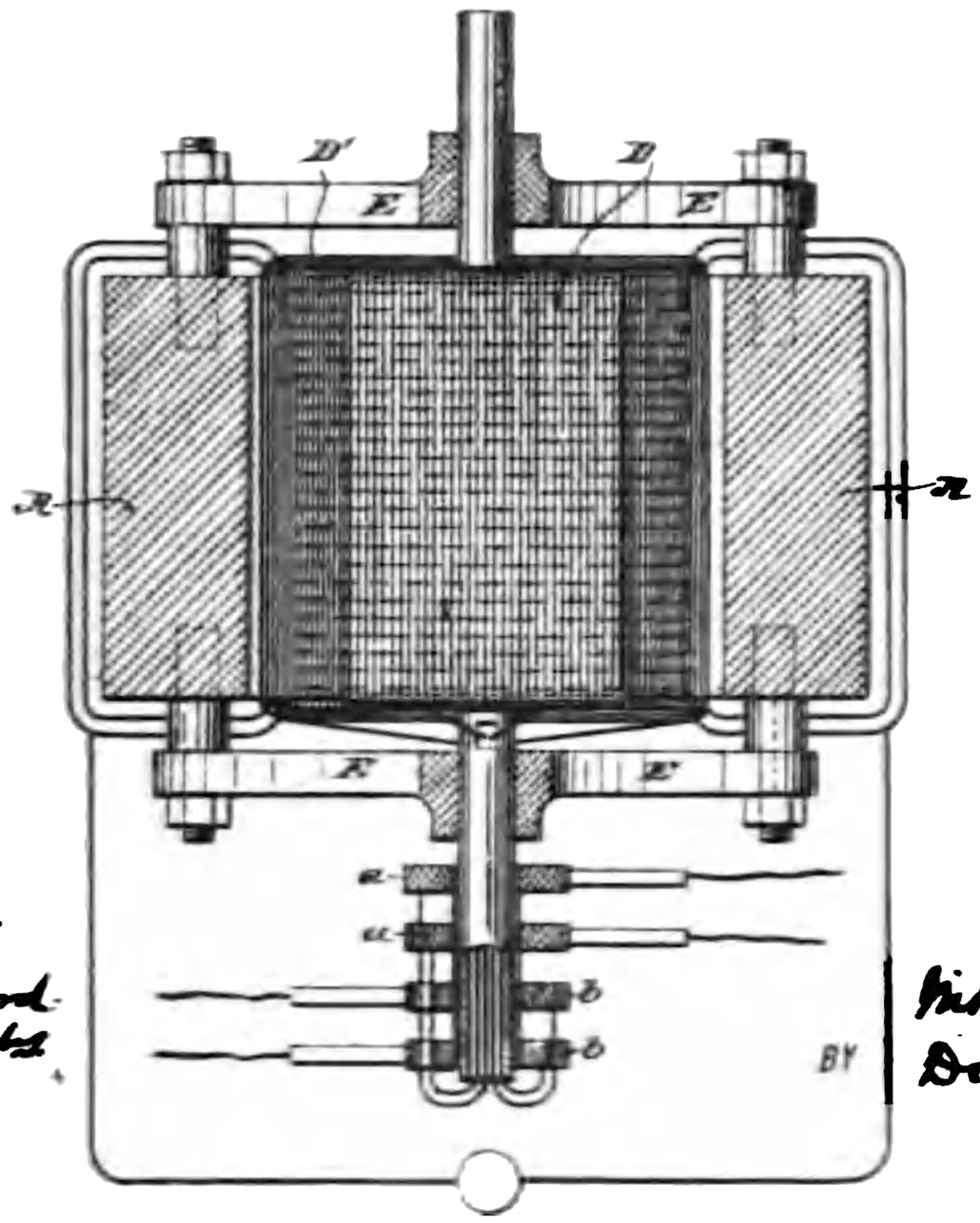

WITNESSES:

Robt. F. Gaylord.
Frank A. Memblez

INVENTOR.

Nikola Tesla
Duncan, Curtis & Page
ATTORNEYS.

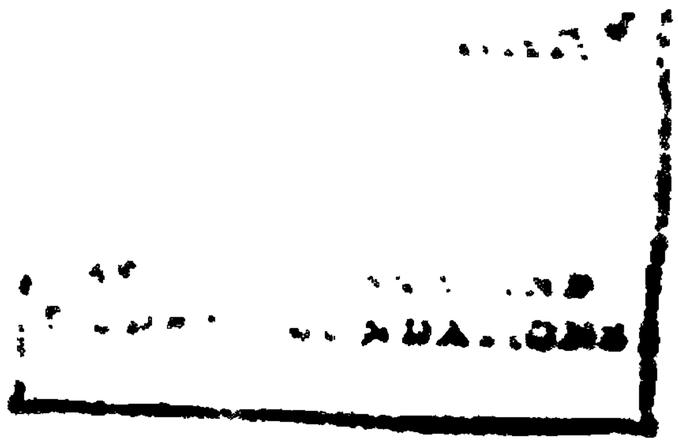

(No Model.)

2 Sheets—Sheet 2.

N. TESLA.

ELECTRO MAGNETIC MOTOR.

No. 381,969.

Patented May 1, 1888.

Fig: 3

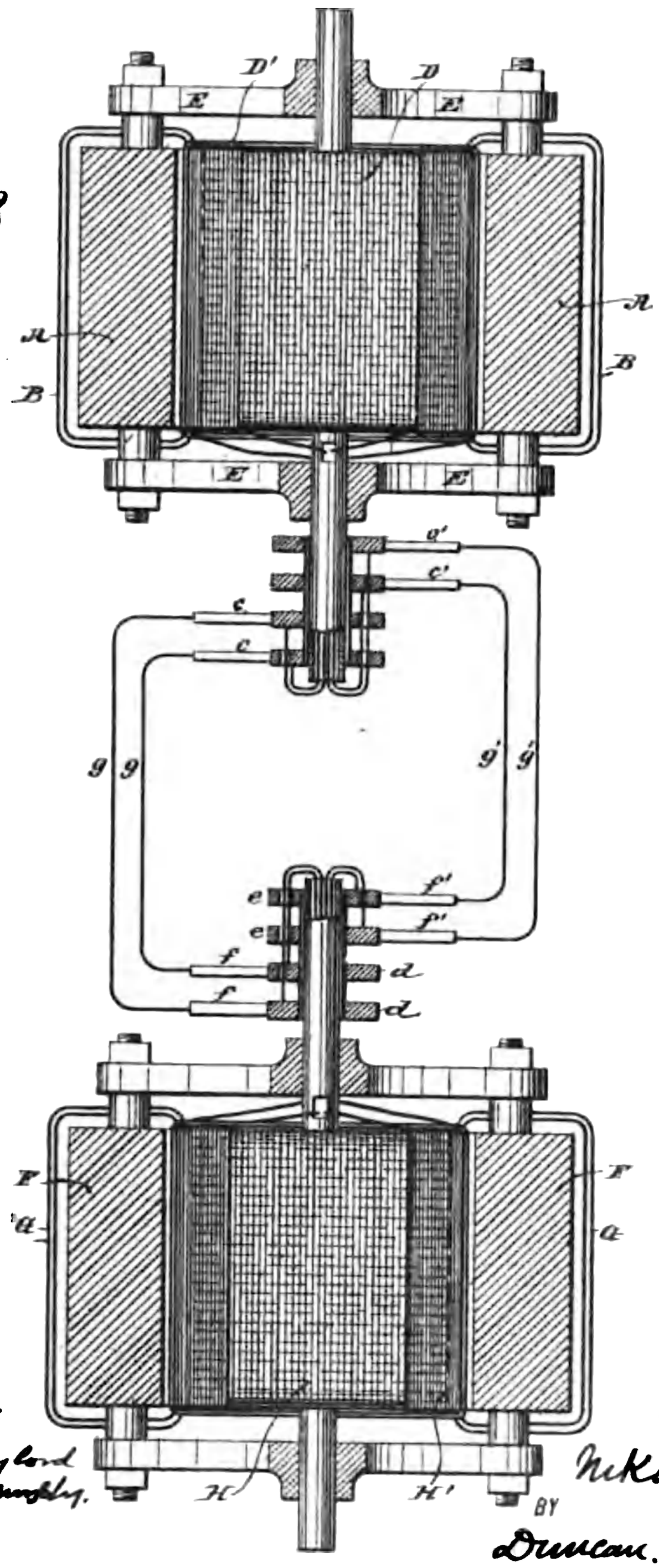

WITNESSES:

Robt F. Gaylord

Frank B. Mussey.

INVENTOR.

Nikola Tesla

BY

Duncan, Curtis & Page

ATTORNEYS.

UNITED STATES PATENT OFFICE.

NIKOLA TESLA, OF NEW YORK, N. Y., ASSIGNOR OF ONE-HALF TO CHARLES F. PECK, OF ENGLEWOOD, NEW JERSEY.

ELECTRO-MAGNETIC MOTOR.

SPECIFICATION forming part of Letters Patent No. 381,969, dated May 1, 1888.

Application filed November 30, 1887. Serial No. 256,502. (No model.)

To all whom it may concern:

Be it known that I, NIKOLA TESLA, from Smiljan Lika, border country of Austria-Hungary, now residing in New York, in the county and State of New York, have invented certain new and useful Improvements in Electro-Magnetic Motors, of which the following is a specification, reference being had to the drawings accompanying and forming a part of the same.

In an application filed by me October 12, 1887, No. 252,132, I have shown and described a novel form of electro-magnetic motor and a mode of operating the same, which may be generally described as follows: The motor is wound with coils forming independent energizing-circuits on either the armature or field magnet, or both, (it is sufficient for present purposes to consider the case in which the coils are on the armature alone,) and these coils are connected up with corresponding circuits on an alternating-current generator. As the result of this, currents of alternately-opposite direction are sent through the energizing-coils of the motor in such manner as to produce a progressive shifting or rotation of the magnetic poles of the armature. This movement of the poles of the armature obviously tends to rotate the armature in the opposite direction to that in which the movement of the poles takes place, owing to the attractive force between said poles and the field-magnets, and the speed of rotation increases from the start until it equals that of the generator, supposing both motor and generator to be alike.

As the poles of the armature are shifted in a direction opposite to that in which the armature rotates, it will be apparent that when the normal-speed is attained the poles of the armature will assume a fixed position relative to the field-magnet, and that in consequence the field-magnets will be energized by magnetic induction, exhibiting two distinct poles, one in each of the pole-pieces. In starting the motor, however, the speed of the armature being comparatively slow, the pole-pieces are subjected to rapid reversals of magnetic polarity; but as the speed increases these reversals become less and less frequent, and finally cease when the movement of the armature become synchronous with that of the generator. This being the case, the field-cores and the pole-pieces of the motor become a magnet, but by induction only.

I have found that advantageous results are secured by winding the field-magnets with a coil or coils and passing a continuous current through them, thus maintaining a permanent field, and in this feature my present invention consists.

I shall now describe the apparatus which I have devised for carrying out this invention and explain the mode of using or operating the same.

Figure 1 is an end view in elevation of my improved motor. Fig. 2 is a part horizontal central section, and Fig. 3 is a diagrammatic representation of the motor and generator combined and connected for operation.

Let A A in Fig. 1 represent the legs or pole-pieces of a field-magnet, around which are coils B B, included in the circuit of a continuous-current generator, C, which is adapted to impart magnetism to the said poles in the ordinary manner.

D D′ are two independent coils wound upon a suitable cylindrical or equivalent armature-core, which, like all others used in a similar manner, should be split or divided up into alternate magnetic and insulating parts in the usual way. This armature is mounted in non-magnetic cross-bars E E, secured to the poles of the field-magnet. The terminals of the armature-coils D D′ are connected to insulated sliding contact-rings *a a b b*, carried by the armature shaft, and brushes *c c′* bear upon these rings to convey to the coils the currents which operate the motor.

The generator for operating this motor is or may be of precisely identical construction; and for convenience of reference I have marked in Fig. 3 its parts, as follows: F F, the field-magnets, energized by a continuous current passing in its field-coils G G; H H′, the coils carried by the cylindrical armature; *d d e e*, the friction or collecting rings, carried by the armature-shaft and forming the terminals of the armature-coils; and *f f′*, the collecting-brushes which deliver the currents developed in the armature-coils to the two circuits *g g′*, which connect the generators with the motor.

The operation of this system will be understood from the foregoing. The action of the generator, by causing a progressive shifting of the poles in the motor-armature, sets up in the latter a rotation opposite in direction to that in which the poles move. If, now, the continuous current be directed through the field coils, so as to strongly energize the magnet A A, the speed of the motor, which depends upon that of the generator, will not be increased, but the power which produces its rotation will be increased in proportion to the energy supplied through the coils B B.

It is characteristic of this motor that its direction of rotation is not reversed by reversing the direction of the current through its field-coils, for the direction of rotation depends not upon the polarity of the field, but upon the direction in which the poles of the armature are shifted. To reverse the motor, the connections of either of the circuits *g g'* must be reversed.

I have found that if the field-magnet of the motor be strongly energized by its coils B B and the circuits through the armature-coils closed, assuming the generator to be running at a certain speed, the motor will not start; but if the field be but slightly energized or in general in such condition that the magnetic influence of the armature preponderates in determining its magnetic condition the motor will start and, with sufficient current, will reach its maximum or normal speed. For this reason it is desirable to keep at the start and until the motor has attained its normal speed, or nearly so, the field-circuit open or to permit but little current to pass through it. I have found, however, if the fields of both the generator and motor be strongly energized that starting the generator starts the motor, and that the speed of the motor is increased in synchronism with the generator. Motors constructed and operated on this principle maintain almost absolutely the same speed for all loads within their normal working-limits; and in practice I have observed that if the motor be overloaded to such an extent as to check its speed the speed of the generator, if its motive power be not too great, is diminished synchronously with that of the motor.

I have in other applications shown how the construction of these or similar motors may be varied in certain well-known ways—as, for instance, by rotating the field about a stationary armature or rotating conductors within the field; but I do not illustrate these features further herein, as with the illustration which I have given I regard the rest as within the power of a person skilled in the art to construct.

The present form of motor is cheap, simple, reliable, and easy to maintain. It requires the simplest type of generator for its operation, and when properly constructed shows a high efficiency.

I do not claim herein the method of transmitting power which this system involves, having made it the subject of another application for patent.

What I claim is:—

The combination, with a motor having independent energizing or armature circuits, of an alternating-current generator with corresponding induced circuits connected with the motor for effecting a progressive shifting of the poles of the motor-armature, and a source of continuous current for energizing the field of said motor, as set forth.

NIKOLA TESLA.

Witnesses:

FRANK B. MURPHY,

FRANK E. HARTLEY.

(No Model.) 2 Sheets—Sheet 1.

N. TESLA.

SYSTEM OF ELECTRICAL DISTRIBUTION.

No. 381,970. Patented May 1, 1888.

Fig: 1.

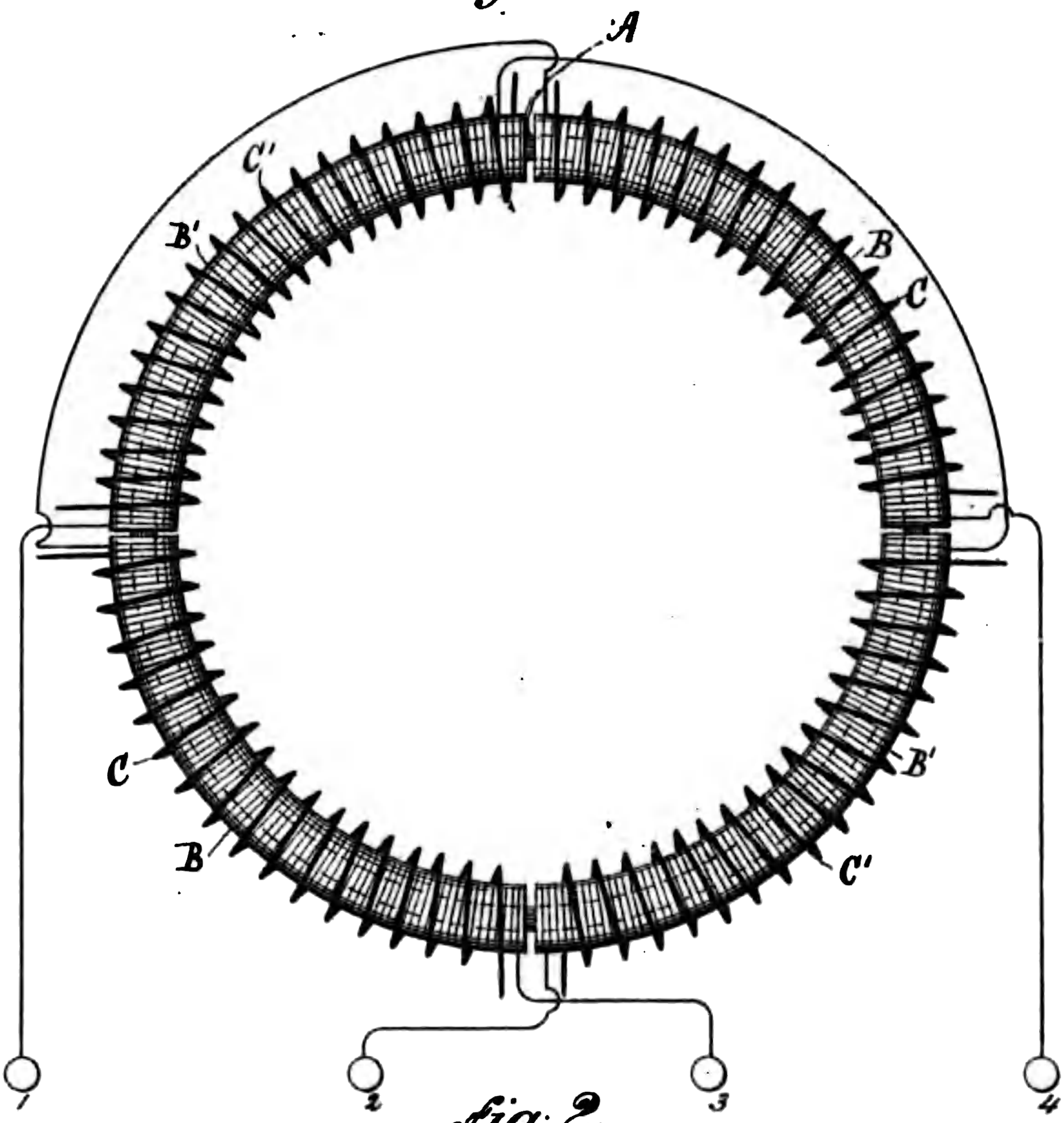

Fig: 2.

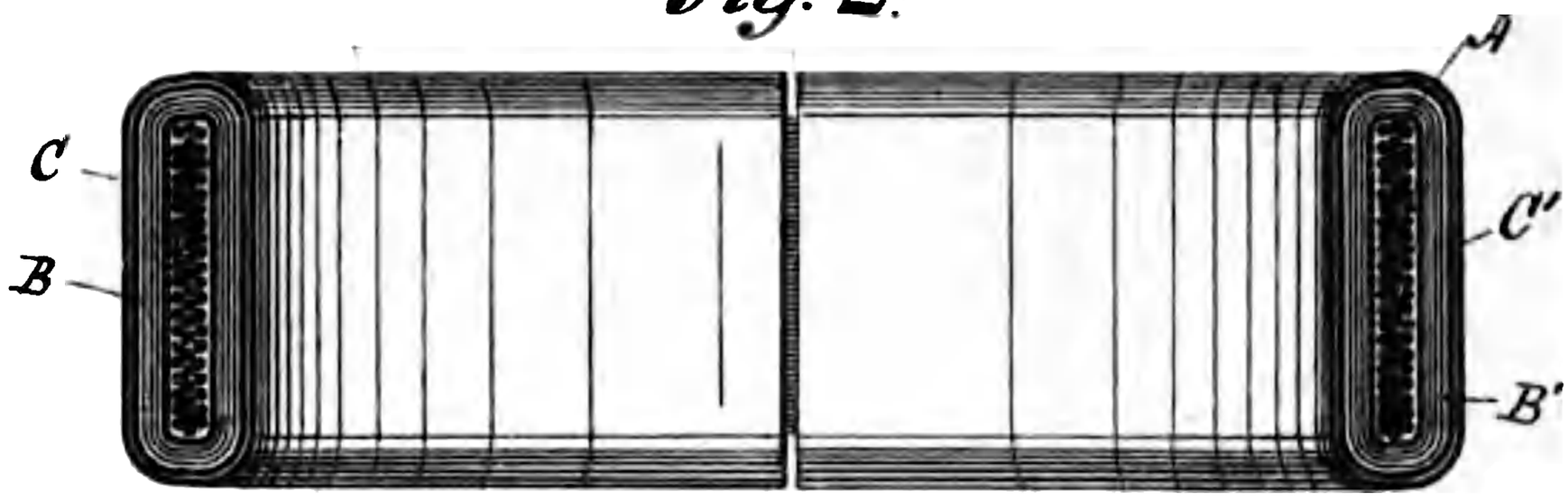

WITNESSES:

Robt. N. Duncan

Robt. F. Gaylord

INVENTOR.

Nikola Tesla.

BY

Duncan, Curtis & Page

his ATTORNEYS.

(No Model.) 2 Sheets—Sheet 2.

N. TESLA.

SYSTEM OF ELECTRICAL DISTRIBUTION.

No. 381,970. Patented May 1, 1888.

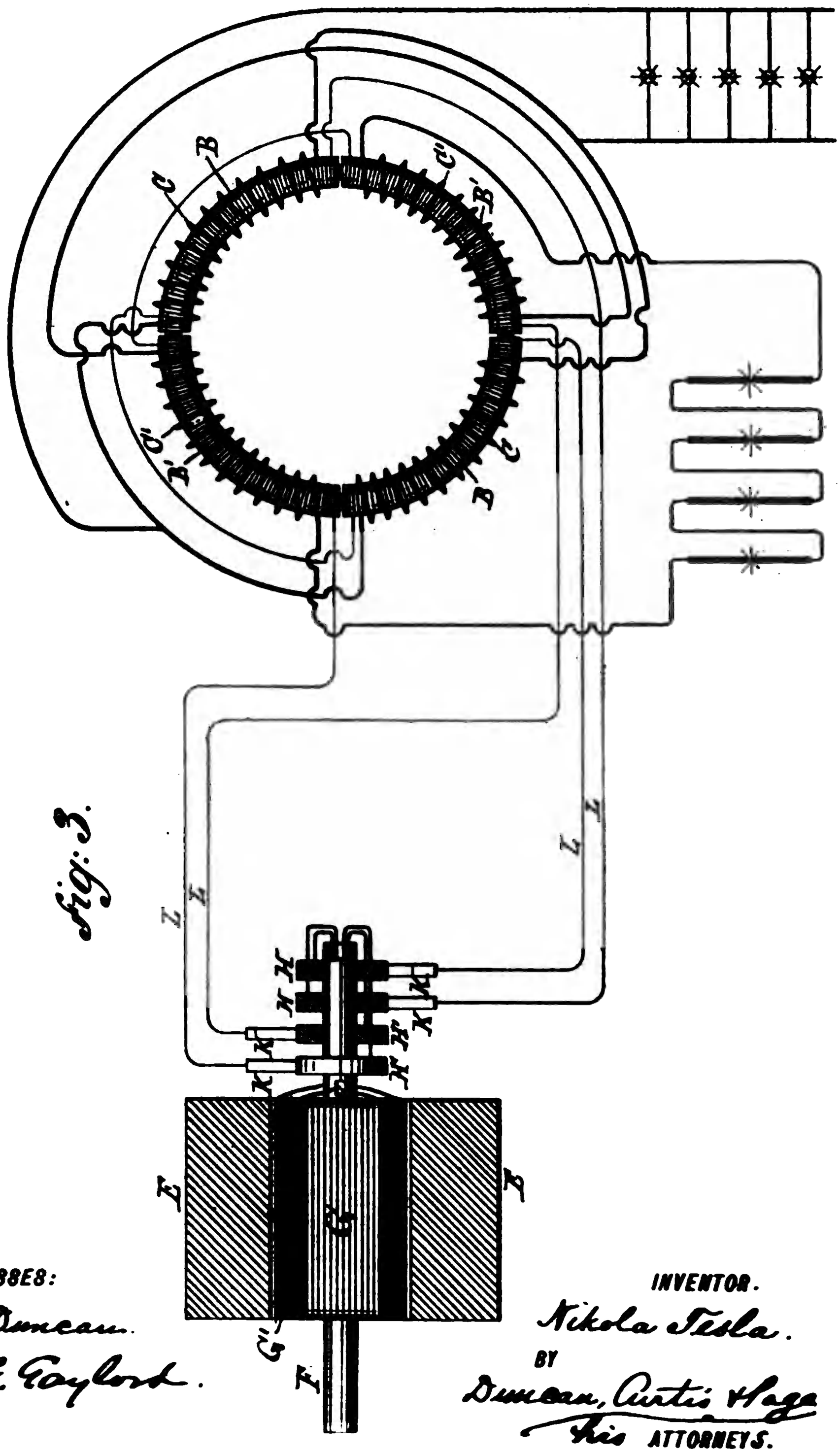

WITNESSES:

Robt. H. Duncan.

Robt. F. Gaylord.

INVENTOR.

Nikola Tesla.

BY

Duncan, Curtis & Page

His ATTORNEYS.

UNITED STATES PATENT OFFICE.

NIKOLA TESLA, OF NEW YORK, N. Y., ASSIGNOR OF ONE-HALF TO CHARLES F. PECK, OF ENGLEWOOD, NEW JERSEY.

SYSTEM OF ELECTRICAL DISTRIBUTION.

SPECIFICATION forming part of Letters Patent No. 381,970, dated May 1, 1888.

Application filed December 23, 1887. Serial No. 258,787. (No model.)

To all whom it may concern:

Be it known that I, NIKOLA TESLA, from Smiljan Lika, border country of Austria-Hungary, now residing at New York, in the county and State of New York, have invented certain new and useful Improvements in Systems of Electrical Distribution, of which the following is a specification, reference being had to the drawings accompanying and forming a part of the same.

This invention relates to those systems of electrical distribution in which a current from a single source of supply in a main or transmitting circuit is caused to induce by means of suitable induction apparatus a current or currents in an independent working circuit or circuits.

The main objects of the invention are the same as have been heretofore obtained by the use of these systems—viz., to divide the current from a single source, whereby a number of lamps, motors, or other translating devices may be independently controlled and operated by the same source of current, and in some cases to reduce a current of high potential in the main circuit to one of greater quantity and lower potential in the independent consumption or working circuit or circuits.

The general character of the devices employed in these systems is now well understood. An alternating-current magneto-machine is used as the source of supply. The current developed thereby is conducted through a transmission-circuit to one or more distant points at which the transformers are located. These consist of induction-machines of various kinds. In some cases ordinary forms of induction-coil have been used with one coil in the transmitting-circuit and the other in a local or consumption circuit, the coils being differently proportioned according to the work to be done in the consumption-circuit—that is to say, if the work requires a current of higher potential than that in the transmission circuit the secondary or induced coil is of greater length and resistance than the primary, while, on the other hand, if a quantity current of lower potential is wanted the longer coil is made the primary. In lieu of these devices various forms of electro-dynamic induction-machines, including the combined motors and generators, have been devised. For instance, a motor is constructed in accordance with well-understood principles, and on the same armature are wound induced coils which constitute a generator. The motor-coils are generally of fine wire and the generator-coils of coarser wire, so as to produce a current of greater quantity and lower potential than the line-current, which is of relatively high potential, to avoid loss in long transmission. A similar arrangement is to wind coils corresponding to those described in a ring or similar core, and by means of a commutator of suitable kind to direct the current through the inducing-coils successively, so as to maintain a movement of the poles of the core and of the lines of force which set up the currents in the induced coils.

Without enumerating the objections to these systems in detail, it will suffice to say that the theory or the principle of the action or operation of these devices has apparently been so little understood that their proper construction and use have up to the present time been attended with various difficulties and great expense. The transformers are very liable to be injured and burned out, and the means resorted to for curing this and other defects have almost invariably been at the expense of efficiency.

The form of converter or transformer which I have devised appears to be largely free from the defects and objections to which I have alluded. While I do not herein advance any theory as to its mode of operation, I would state that, in so far as the principal of construction is concerned, it is analogous to those transformers which I have above described as electro-dynamic induction-machines, except that it involves no moving parts whatever, and is hence not liable to wear or other derangement, and requires no more attention than the other and more common induction-machines.

In carrying out my invention I provide a series of inducing-coils and corresponding induced coils, which, by preference, I wind upon a core closed upon itself—such as an annulus or ring subdivided in the usual manner. The

two sets of coils are wound side by side or superposed or otherwise placed in well-known ways to bring them into the most effective relations to one another and to the core. The inducing or primary coils wound on the core are divided into pairs or sets by the proper electrical connections, so that while the coils of one pair or set to co-operate in fixing the magnetic poles of the core at two given diametrically-opposite points, the coils of the other pair or set—assuming, for sake of illustration, that there are but two—tend to fix the poles ninety degrees from such points. With this induction device I use an alternating-current generator with coils or sets of coils to correspond with those of the converter, and by means of suitable conductors I connect up in independent circuits the corresponding coils of the generator and converter. It results from this that the different electrical phases in the generator are attended by corresponding magnetic changes in the converter; or, in other words, that as the generator-coils revolve the points of greatest magnetic intensity in the converter will be progressively shifted or whirled around. This principle I have applied under variously-modified conditions to the operation of electro-magnetic motors, and in previous applications, notably in those having Serial Nos. 252,132 and 256,561, I have described in detail the manner of constructing and using such motors. In the present application my object is to describe the best and most convenient manner of which I am at present aware of carrying out the invention as applied to a system of electrical distribution; but one skilled in the art will readily understand from the description by the modifications proposed in said applications, wherein the form of both the generator and converter in the present case may be modified.

In illustration therefore of the details of construction which my present invention involves, I now refer to the accompanying drawings.

Figure 1 is a diagrammatic illustration of the converter and the electrical connections of the same. Fig. 2 is a horizontal central cross-section of Fig. 1. Fig. 3 is a diagram of the circuits of the entire system, the generator being shown in section.

I use a core, A, which is closed upon itself—that is to say, of an annular cylindrical or equivalent form—and as the efficiency of the apparatus is largely increased by the subdivision of this core I make it of thin strips, plates, or wires of soft iron electrically insulated as far as practicable. Upon this core, by any well-known method, I wind, say, four coils, B B B′ B′, which I use as primary coils, and for which I use long lengths of comparatively fine wire. Over these coils I then wind shorter coils of coarser wire, C C C′ C′, to constitute the induced or secondary coils. The construction of this or any equivalent form of converter may be carried further, as above pointed out, by inclosing these coils with iron—as, for example, by winding over the coils a layer or layers of insulated iron wire.

The device is provided with suitable binding-posts, to which the ends of the coils are led. The diametrically-opposite coils B B and B′ B′ are connected, respectively, in series, and the four terminals are connected to the binding-posts 1 2 3 4. The induced coils are connected together in any desired manner. For example, as shown in Fig. 3, C C may be connected in multiple arc when a quantity current is desired—as for running a group of incandescent lamps, D—while C′ C′ may be independently connected in series in a circuit including arc lamps or the like. The generator in this system will be adapted to the converter in the manner illustrated. For example, in the present case I employ a pair of ordinary permanent or electro magnets, E E, between which is mounted a cylindrical armature on a shaft, F, and wound with two coils, G G′. The terminals of these coils are connected, respectively, to four insulated contact or collecting rings, H H H′ H′, and the four line circuit-wires L connect the brushes K, bearing on these rings, to the converter in the order shown. Noting the results of this combination, it will be observed that at a given point of time the coil G is in its neutral position and is generating little or no current, while the other coil, G′, is in a position where it exerts its maximum effect. Assuming coil G to be connected in circuit with coils B B of the converter, and coil G′ with coils B′ B′, it is evident that the poles of the ring A will be determined by coils B′ B′ alone; but as the armature of the generator revolves, coil G develops more current and coil G′ less, until G reaches its maximum and G′ its neutral position. The obvious result will be to shift the poles of the ring A through one-quarter of its periphery. The movement of the coils through the next quarter of a turn, during which coil G′ enters a field of opposite polarity and generates a current of opposite direction and increasing strength, while coil G, in passing from its maximum to its neutral position generates a current of decreasing strength and same direction as before, causes a further shifting of the poles through the second quarter of the ring. The second half-revolution will obviously be a repetition of the same action. By the shifting of the poles of the ring A a powerful dynamic inductive effect on the coils C C′ is produced. Besides the currents generated in the secondary coils by dynamo-magnetic induction other currents will be set up in the same coils in consequence of any variations in the intensity of the poles in the ring A. This should be avoided by maintaining the intensity of the poles constant, to accomplish which care should be taken in designing and proportioning the generator and in distributing the coils in the ring A and balancing their effect. When this is

done, the currents are produced by dynamo-magnetic induction only, the same result being obtained as though the poles were shifted by a commutator with an infinite number of segments.

The modifications which are applicable to other forms of converter are in many respects applicable to this. I refer more particularly to the form of the core, the relative lengths and resistances of the primary and secondary coils, and the arrangements for running or operating the same.

The new method of electrical conversion which this system involves I have made the subject of another application, and I do not claim it therefore herein.

Without limiting myself therefore to any specific form, what I claim is—

1. The combination, with a core closed upon itself, inducing or primary coils wound thereon and connected up in independent pairs or sets, and induced or secondary coils wound upon or near the primary coils, of a generator of alternating currents and independent connections to the primary coils, whereby by the operation of the generator a progressive shifting of the poles of the core is effected, as set forth.

2. The combination, with an annular or similar magnetic core and primary and secondary coils wound thereon, of an alternating-current generator having induced or armature coils corresponding to the primary coils, and independent circuits connecting the primary coils with the corresponding coils of the generator, as herein set forth.

3. The combination, with independent electric transmission-circuits, of transformers consisting of annular or similar cores wound with primary and secondary coils, the opposite primary coils of each transformer being connected to one of the transmission-circuits, an alternating-current generator with independent induced or armature coils connected with the transmission-circuits, whereby alternating currents may be directed through the primary coils of the transformers in the order and manner herein described.

NIKOLA TESLA.

Witnesses:
ROBT. H. DUNCAN,
ROBT. F. GAYLORD.

(No Model.) 2 Sheets—Sheet 1.

N. TESLA.

ELECTRO MAGNETIC MOTOR.

No. 382,279. Patented May 1, 1888.

Fig: 1.

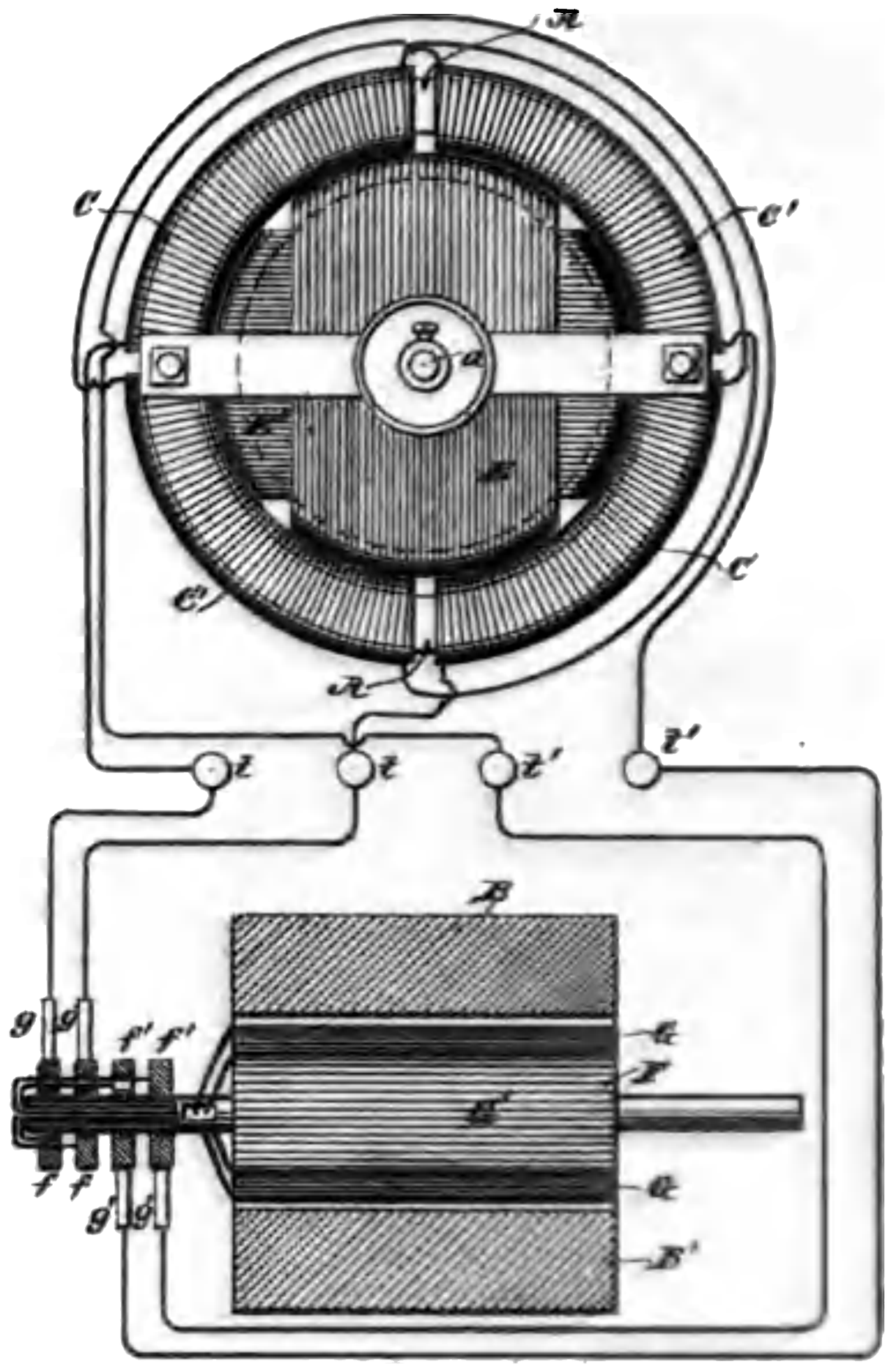

Fig: 2.

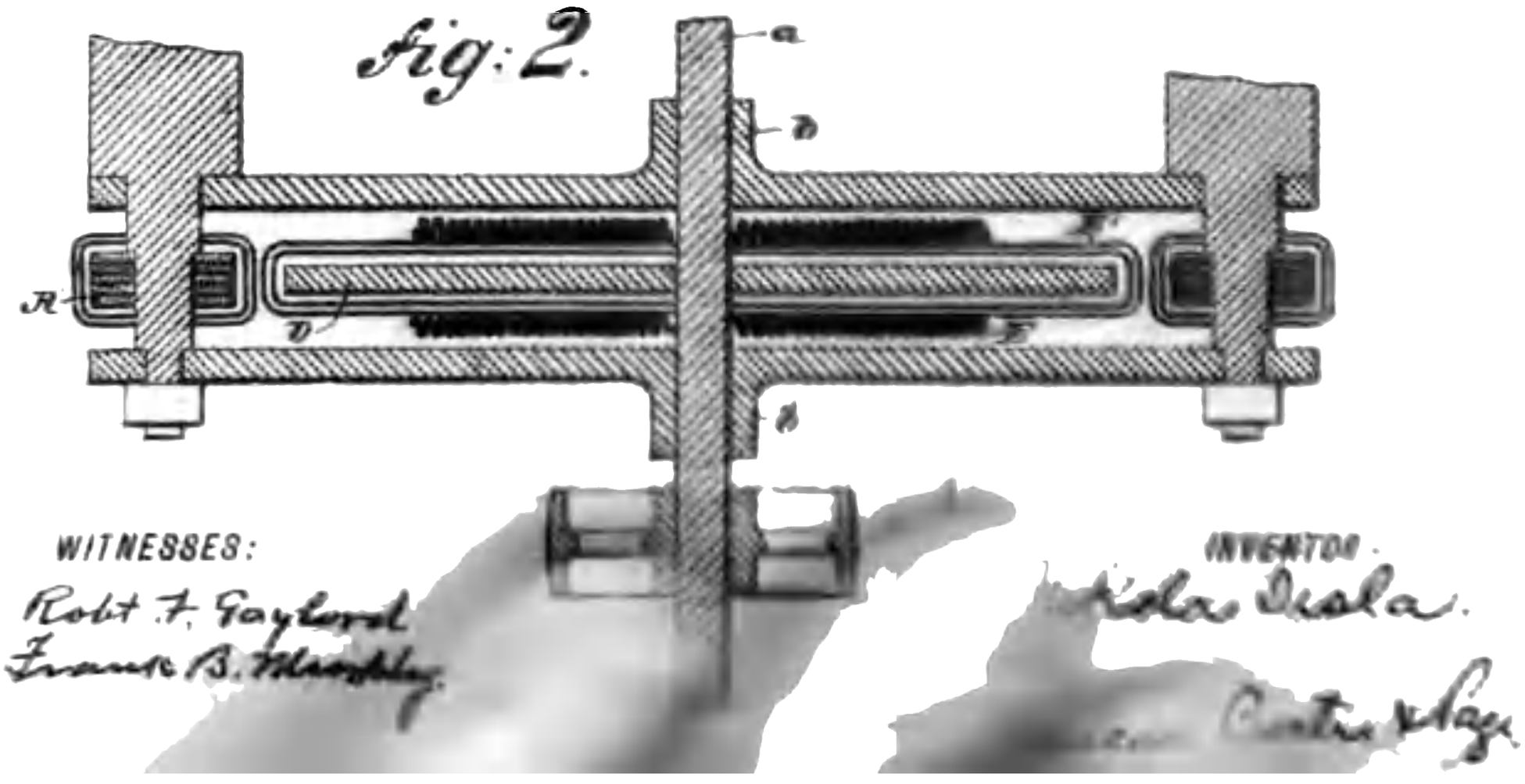

WITNESSES:
Robt. F. Gaylord
Frank B. Mansfield

INVENTOR
Nikola Tesla.
Curtis & Page

(No Model.) 2 Sheets—Sheet 2.

N. TESLA.

ELECTRO MAGNETIC MOTOR.

No. 382,279. Patented May 1, 1888.

Fig: 3

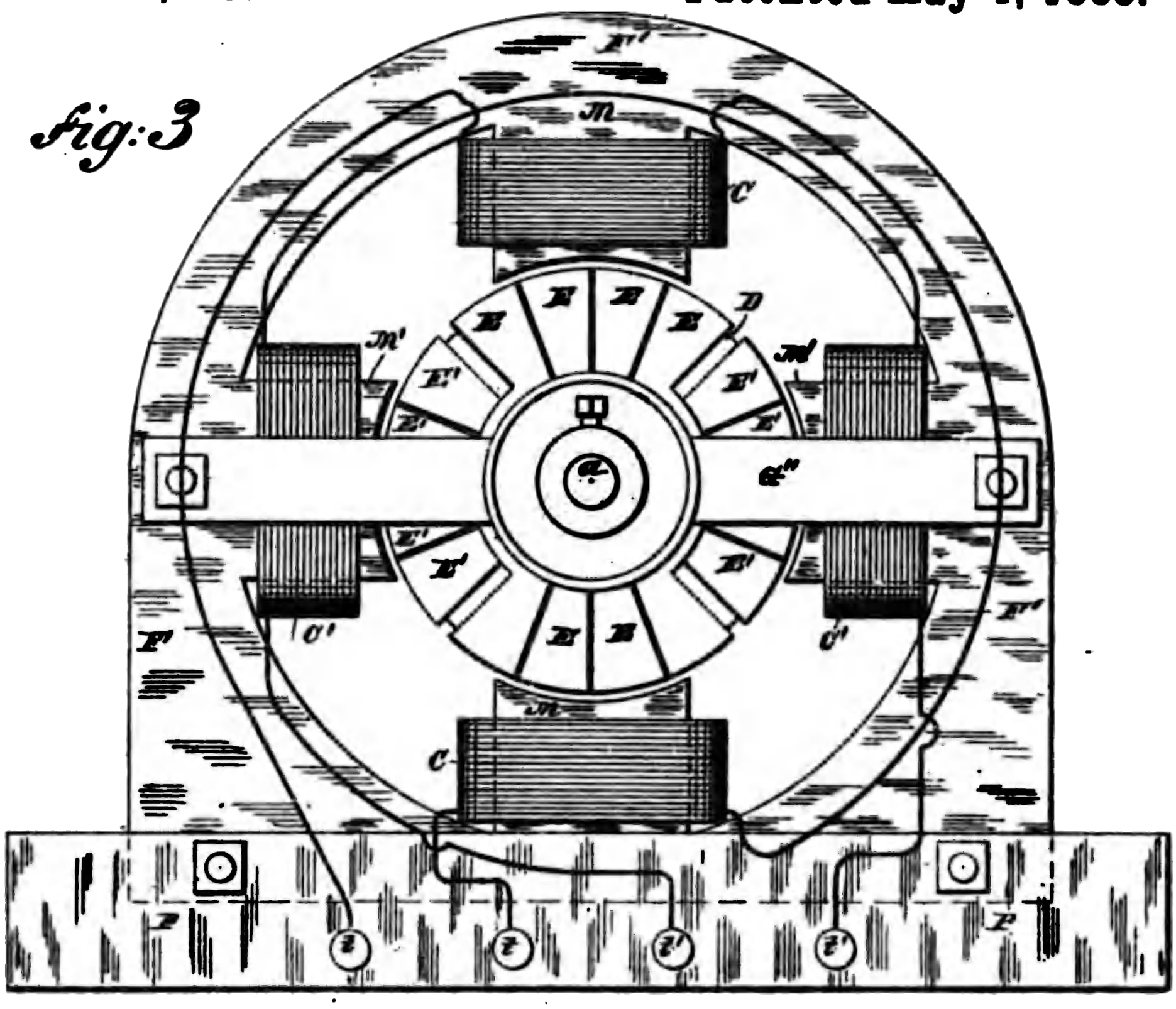

Fig: 4.

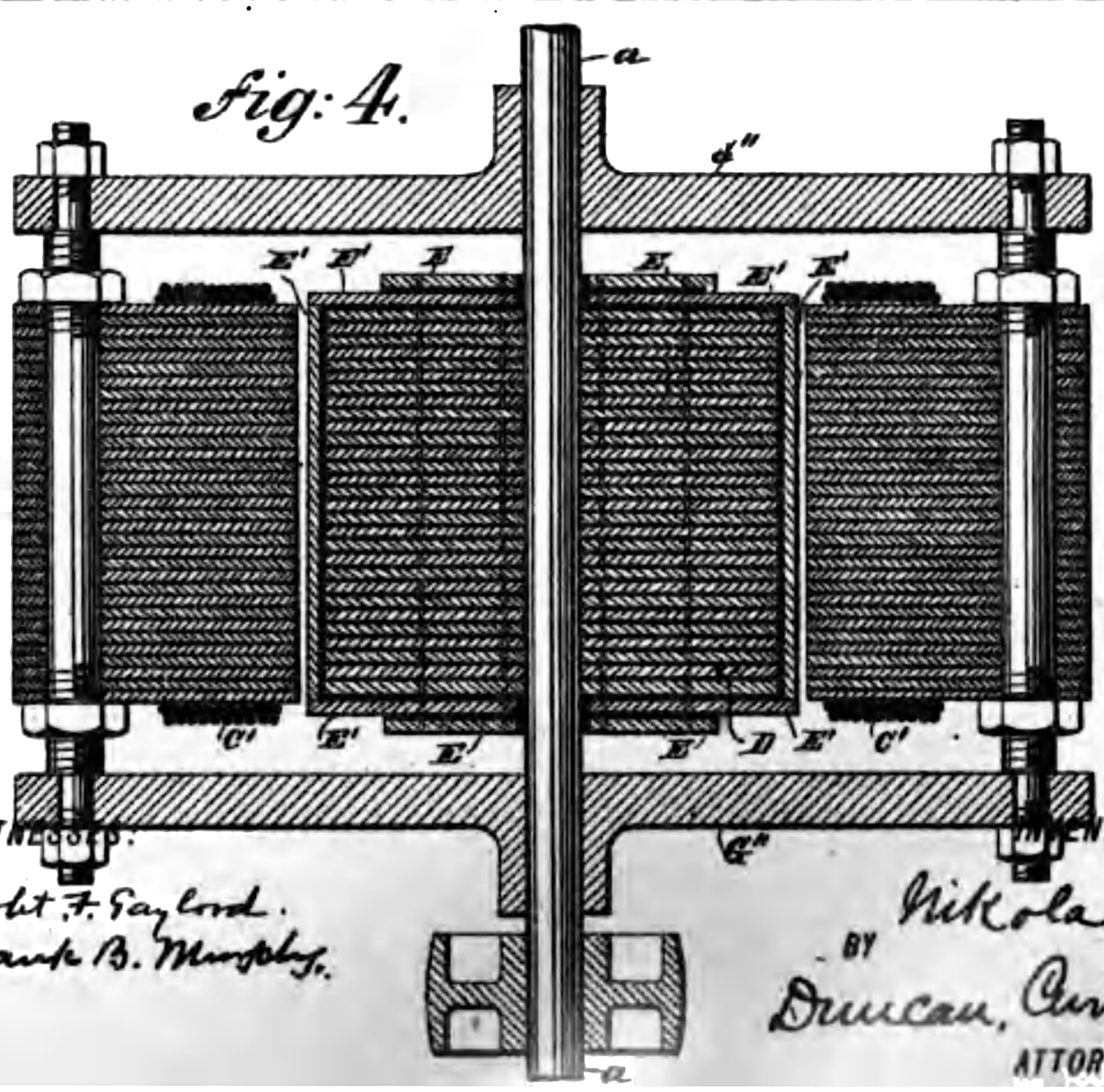

WITNESSES:
Robt. F. Gaylord.
Frank B. Murphy.

INVENTOR,
Nikola Tesla.
BY
Duncan, Curtis & Page
ATTORNEYS.

UNITED STATES PATENT OFFICE.

NIKOLA TESLA, OF NEW YORK, N. Y., ASSIGNOR OF ONE-HALF TO CHARLES F. PECK, OF ENGLEWOOD, NEW JERSEY.

ELECTRO-MAGNETIC MOTOR.

SPECIFICATION forming part of Letters Patent No. 382,279, dated May 1, 1888.

Application filed November 30, 1887. Serial No. 256,561. (No model.)

To all whom it may concern:

Be it known that I, NIKOLA TESLA, a subject of the Emperor of Austria, from Smiljan, Lika, border country of Austria-Hungary, now residing at New York, in the county and State of New York, have invented certain new and useful Improvements in Electro-Magnetic Motors, of which the following is a specification, reference being had to the drawings accompanying and forming a part of the same.

In a former application, filed October 12, 1887, No. 252,132, I have shown and described a mode or plan of operating electric motors by causing a progressive shifting of the poles of one or both of the parts or elements of a motor—that is to say, of either the field magnet or magnets or armature, or both. I accomplish this by constructing a motor with two or more independent energizing-circuits, on the field-magnets, for example, and I connect these up with corresponding induced or generating circuits in an alternating-current generator, so that alternating currents are caused to traverse the motor-circuits. By so doing the poles of the field-magnet of the motor are progressively shifted, and by their attraction upon a rotary armature set up a rotation in the latter in the direction of the movement of the poles. In this case, however, the rotation is produced and maintained by the direct attraction of the magnetic elements of the motor. I have discovered that advantageous results may be secured in this system by utilizing the shifting of the poles primarily to set up currents in a closed conductor located within the influence of the field of the motor, so that the rotation may result from the reaction of such currents upon the field.

To illustrate more fully the nature of the invention I refer to the accompanying drawings.

Figure 1 represents in side elevation the operative parts or elements of a motor embodying the principles of my invention, and in section the generator for operating the same. Fig. 2 is a horizontal central section of the motor in Fig. 1, the circuits being shown partly in diagram. Fig. 3 is a modified form of motor in side elevation. Fig. 4 is a central horizontal cross-section of Fig. 3.

In Figs. 1 and 2, A is an annular core of soft iron, preferably laminated or formed of insulated sections, so as to be susceptible to rapid variations of magnetism. This core is wound with four coils, C C C′ C′, the diametrically-opposite coils being connected in the same circuit, and the two free ends of each pair being brought to the terminals *t* and *t′*, respectively, as shown. Within this annular field-magnet A is mounted a soft-iron cylinder or disk, D, on an axis, *a*, in bearings *b b*, properly supported by the frame-work of the machine. The disk carries two coils, E E′, of insulated wire, wound at right angles to one another, and having their respective ends joined, so that each coil forms a separate closed circuit.

In illustration of the action or mode of operation of this apparatus, let it be assumed that the annular field-magnet A is permanently magnetized, so as to present two free poles diametrically opposite. If suitable mechanical provision be now made for rotating the field-magnet around the disk, the apparatus exemplifies the conditions of an ordinary magneto-generator, and currents would be set up in the coils or closed conductors E E′ on the disk D. Evidently these currents would be the most powerful at or near the points of the greatest density of the lines of force, and they would, as in all similar cases, tend, at least theoretically, to establish magnetic poles in the disk D at right angles to those in the annular field-magnet A. As a result of the well-known reaction of these polarities upon each other, a more or less powerful tendency in the disk to rotate in the same direction as that of the field-magnet would be established. If, on the other hand, the ring or annular field-magnet A be held stationary and its magnetic poles progressively shifted by passing through its coils C C′ properly-alternated currents, it is obvious that similar results will follow, for the passage of the currents causing the shifting or whirling of the poles of the field-magnet A induces currents in the closed circuits of the armature coils E E′, with the result of setting up a rotation of the disk D in the same direction of such shifting. Inasmuch as the currents are always induced or generated in the coils E E′ in the same manner, the poles of the disk or cylinder follow continuously the poles of the annular field-magnet, maintaining, at least theoretically, the same rela-

tive positions. This results in an even and perfect action of the apparatus.

In order that the system as a whole may be better understood, I shall now describe the mode or plan devised by me for producing the currents that effect the progressive shifting of the poles of the motor.

In Fig. 1, B B′ are the poles or pole pieces of an alternating-current generator. They are permanently magnetized and of opposite polarity. F is a cylindrical or other armature containing the independent coils G G′. These coils are wound at right angles, so that while one is crossing the strongest portion of the field of force the other is at the neutral point. The coils G G′ terminate in the two pairs of insulated collecting-rings *f* and *f′*, upon which bear the brushes *g g′*. Four wires connect the motor-terminals *t* and *t′* with the brushes *g* and *g′*, respectively. When the generator is rotated, the coil G will at the certain point shown in the drawings be generating its maximum current, while coil G′ is neutral. Let it be assumed that this current is conveyed from the rings *f f′* to the terminals *t t* and through the coils C C. Its effect will be to establish poles in the ring midway between the two coils. By the further rotation of the generator the coil G′ is brought within the influence of the field and begins to produce a current, which grows stronger as the said coil approaches the maximum points of the field, while the current produced in the coil G diminishes as the said coil recedes from those points. The current from the coil G′, being conveyed to the terminals *t′ t′* and through coils C′ C′, has a tendency to establish poles at right angles to those set up by the coils C C; but owing to the greater effect of the current in coils C C the result is merely to advance the poles from the position in which they would remain if due to the magnetizing influence of coils C C alone. This progression continues for a quarter-revolution until coil G G becomes neutral and coil G′ G′ produces its maximum current. The action described is then repeated, the poles having been shifted through one-half of the field, or a half-revolution. The second half-revolution is accomplished in a similar way, the same polarity being maintained in the shifting poles by the movement of the generator-coils alternately through fields of opposite polarity.

The same principle of operation may be applied to motors of various forms, and I have shown one of such modified forms in Figs. 3 and 4 of the drawings. In these figures, M M′ are field-magnets secured to or forming part of a frame, F′, mounted on a base, P. These magnets should be laminated or composed of a number of electrically-insulated magnetic sections, to prevent the circulation of induced currents and to render them capable of rapid magnetic changes. These magnetic cores or poles are wound with insulated coils C C′, the diametrically-opposite coils being connected together in series and their free ends brought to terminals *t t′*, respectively. Between the poles there is mounted, in bearings in the cross-pieces G″, a cylindrical iron core, D, which, in order to prevent the formation of eddying currents, and the loss consequent thereon, is subdivided in the usual way. Insulated conductors or coils are applied to the cylinder D longitudinally, and for these I may employ copper plates E E′, which are secured to the sides and ends of the cylindrical core in well-known ways. These plates or conductors may form one or preferably several independent circuits around the core. In the drawings two of such circuits are shown, formed respectively by the conductors E and E′, which are insulated from each other. It is advantageous also to slot these plates longitudinally, to prevent the formation of eddy currents and waste of energy.

From what has now been given the operation of this apparatus will be readily understood. To the binding-posts *t t′* are connected the proper circuits from the generator to cause a progressive shifting of the resultant magnetic poles produced by the magnets M upon the armature. Thus currents are induced in the closed circuits on the core, which, energizing the core strongly, maintain a powerful attraction between the same and the field, which causes a rotation of the armature in the direction in which the resultant poles are shifted.

The particular advantage of the construction illustrated in Figs. 3 and 4 is that a concentrated and powerful field is obtained and a remarkably powerful tendency to rotation in the armature secured. The same results may be obtained in the form illustrated in Figs. 1 and 2, however, by forming polar projections on the field and armature cores.

When these motors are not loaded, but running free, the rotation of the armature is nearly synchronous with the rotation of the poles of the field, and under these circumstances very little current is perceptible in the coils E E′; but if a load is added the speed tends to diminish and the currents in coils E E′ are augmented, so that the rotary effort is increased proportionately.

Obviously the principle of this invention is capable of many modified applications, most of which follow as a matter of course from the constructions described. For instance, the armature-coils, or those in which the currents are set up by induction, may be held stationary and the alternating currents from the generator conducted through the rotating inducing or field coils by means of suitable sliding contacts. It is also apparent that the induced coils may be movable and the magnetic parts of the motor stationary; but I have illustrated these modifications fully in the application to which reference has herein been made.

In the case of motors wound with independent field and armature circuits and operated by shifting their poles, as described in my said

prior application, I may by short-circuiting the armature-coils apply the present invention in order to obtain greater power on starting.

An advantage and characteristic feature of motors constructed and operated in accordance with this invention is their capability of almost instantaneous reversal by a reversal of one of the energizing-currents from the generator. This will be understood from a consideration of the working conditions. Assuming the armature to be rotating in a certain direction following the movement of the shifting poles, then reverse the direction of the shifting, which may be done by reversing the connections of one of the two energizing-circuits. If it be borne in mind that in a dynamo-electric machine the energy developed is very nearly proportionate to the cube of the speed, it is evident that at such moment an extraordinary power is brought to play in reversing the motor. In addition to this the resistance of the motor is very greatly reduced at the moment of reversal, so that a much greater amount of current passes through the energizing-circuits.

The phenomenon alluded to—viz., the variation of the resistance of the motor apparently like that in ordinary motors—I attribute to the variation in the amount of self-induction in the primary or energizing circuits.

These motors present numerous advantages, chief among which are their simplicity, reliability, economy in construction and maintenance, and their easy and dangerless management. As no commutators are required on either the generators or the motors, the system is capable of a very perfect action and involves but little loss.

I do not claim herein the mode or plan of producing currents in closed conductors in a magnetic field which is herein disclosed, except in its application to this particular purpose; but

What I claim is—

1. The combination, with a motor containing independent inducing or energizing circuits and closed induced circuits, of an alternating-current generator having induced or generating circuits corresponding to and connected with the energizing-circuits of the motor, as set forth.

2. An electro-magnetic motor having its field-magnets wound with independent coils and its armature with independent closed coils, in combination with a source of alternating currents connected to the field-coils and capable of progressively shifting the poles of the field-magnet, as set forth.

3. A motor constructed with an annular field-magnet wound with independent coils and a cylindrical or disk armature wound with closed coils, in combination with a source of alternating currents connected with the field-magnet coils and acting to progressively shift or rotate the poles of the field, as herein set forth.

NIKOLA TESLA.

Witnesses:
FRANK R. MURPHY,
FRANK E. HARTLEY.

(No Model.) 4 Sheets—Sheet 1.

N. TESLA.

ELECTRICAL TRANSMISSION OF POWER.

No. 382,280. Patented May 1, 1888.

Fig. 1

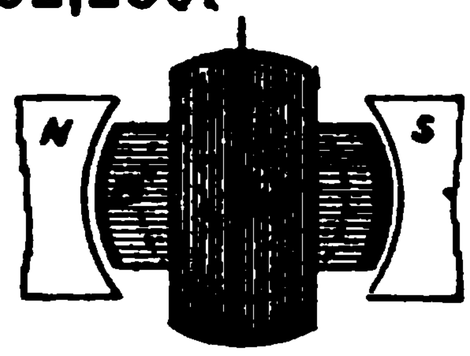

Fig. 1a

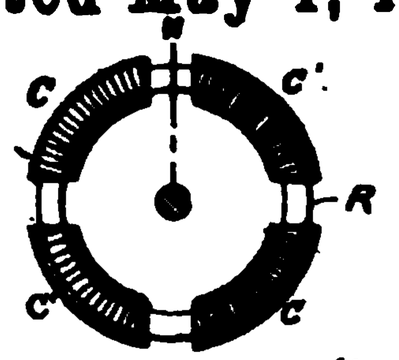

Fig. 2

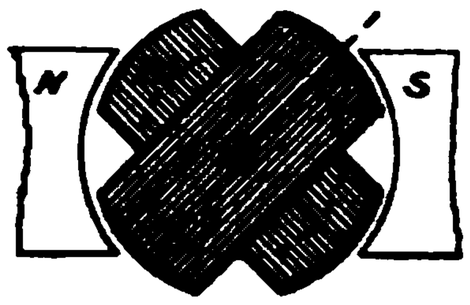

Fig. 2a

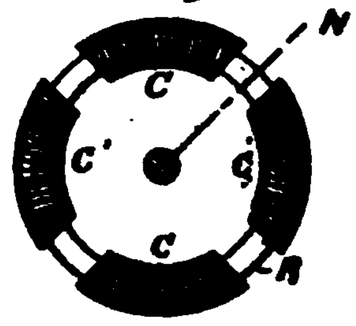

Fig. 3

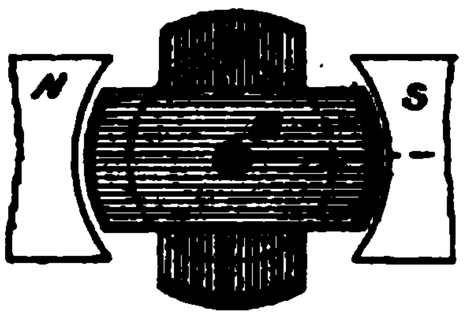

Fig. 3a

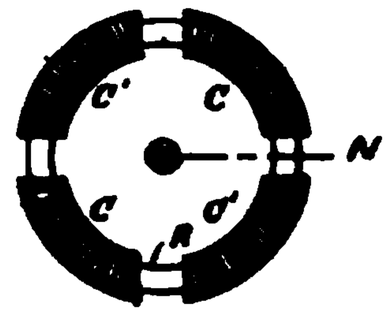

Fig. 4

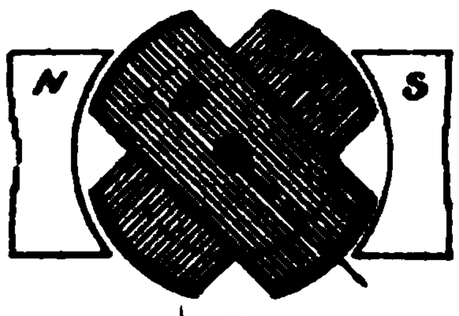

Fig. 4a

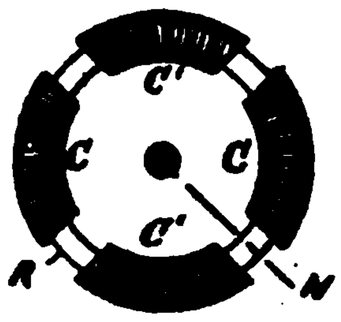

Fig. 5

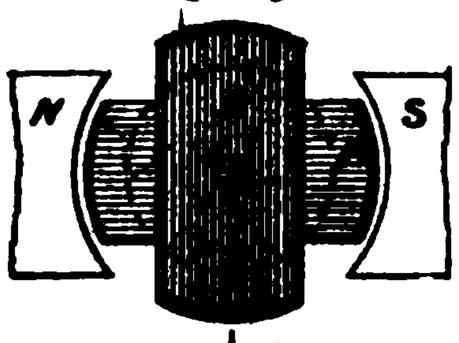

Fig. 5a

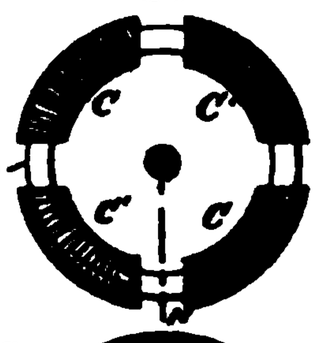

Fig. 6

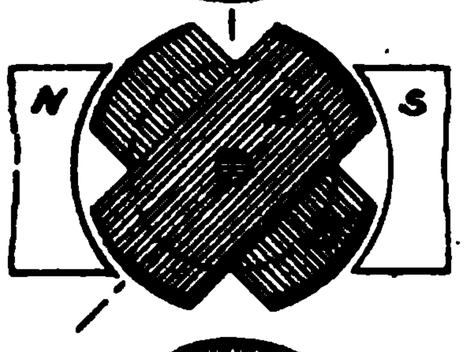

Fig. 6a

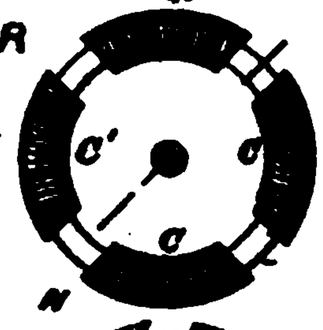

Fig. 7.

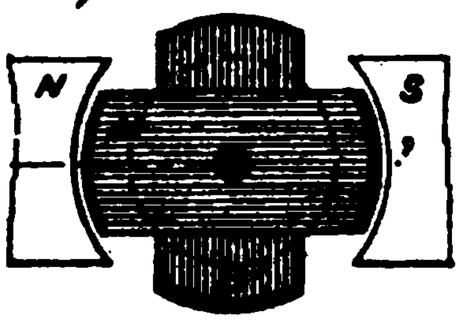

Fig. 7a

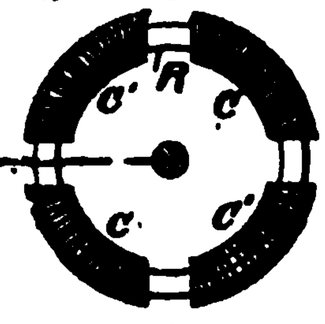

Fig. 8.

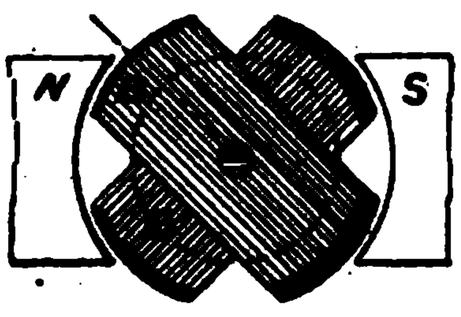

Fig. 8a

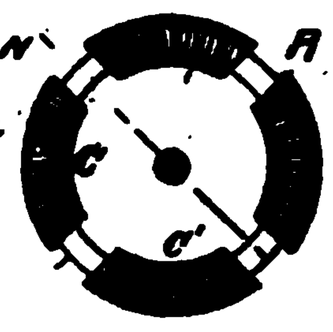

WITNESSES:

D. H. Shuman

Marvin A. Curtis

INVENTOR.

Nikola Tesla.

BY

Duncan, Curtis & Page.

ATTORNEYS.

(No Model.) 4 Sheets—Sheet 2.

N. TESLA.

ELECTRICAL TRANSMISSION OF POWER.

No. 382,280. Patented May 1, 1888.

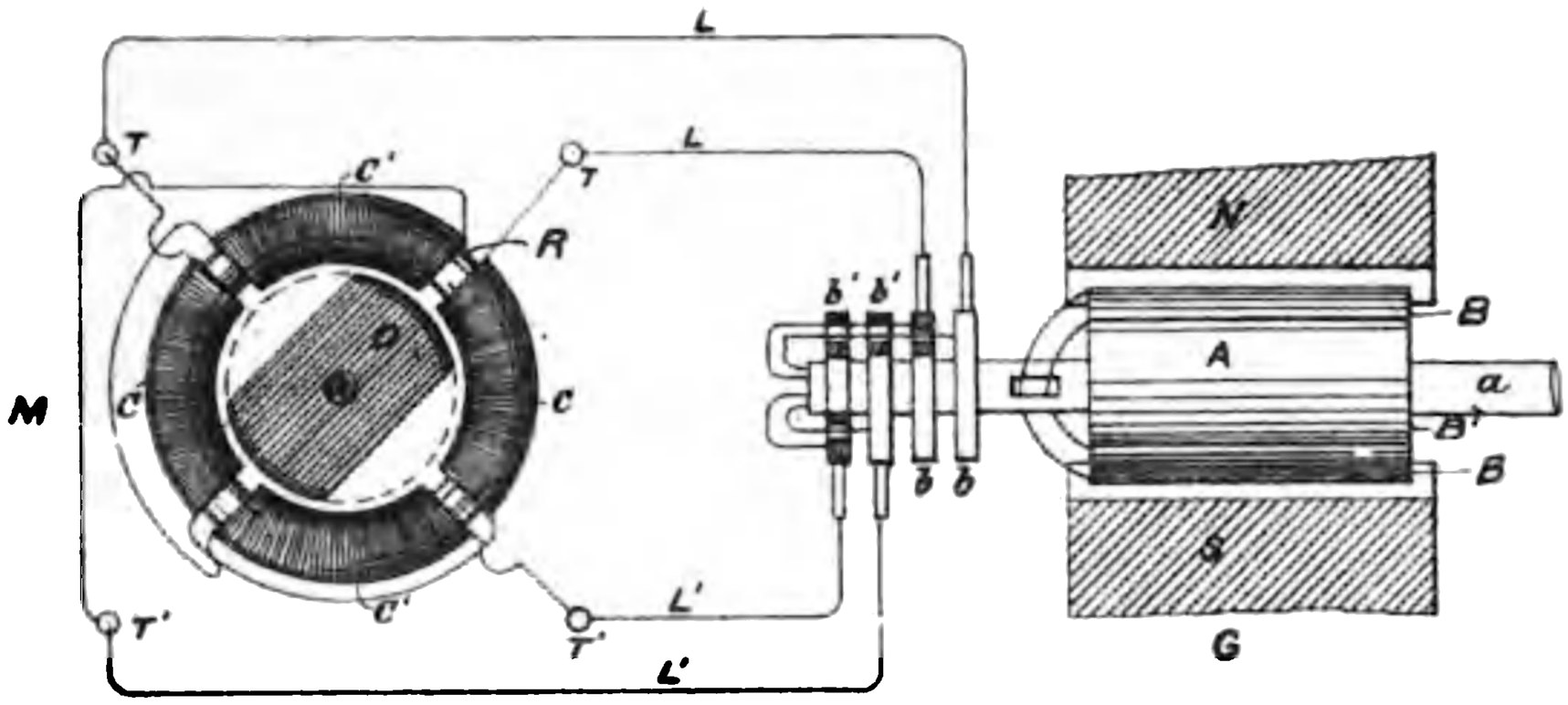

Fig. 9

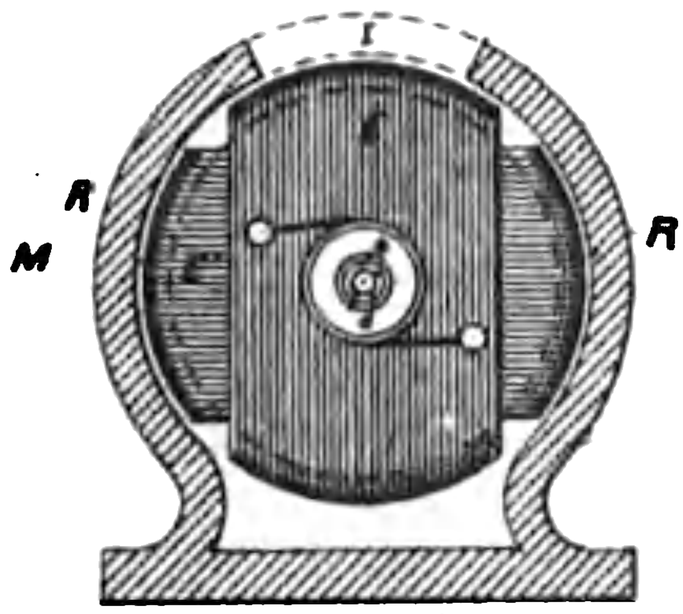

Fig. 10

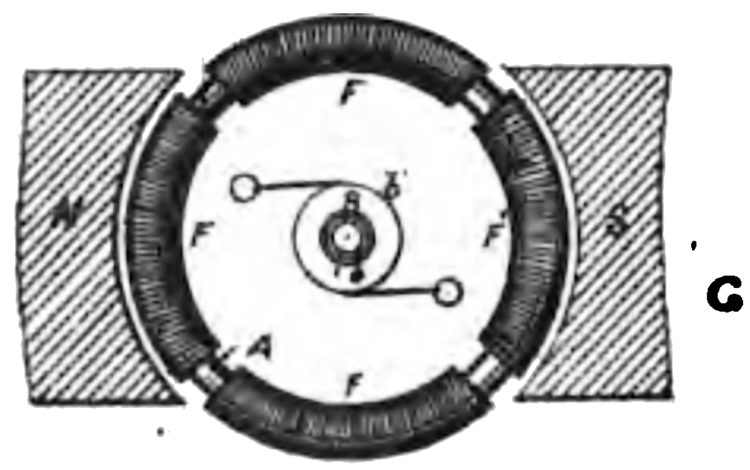

Fig. 11

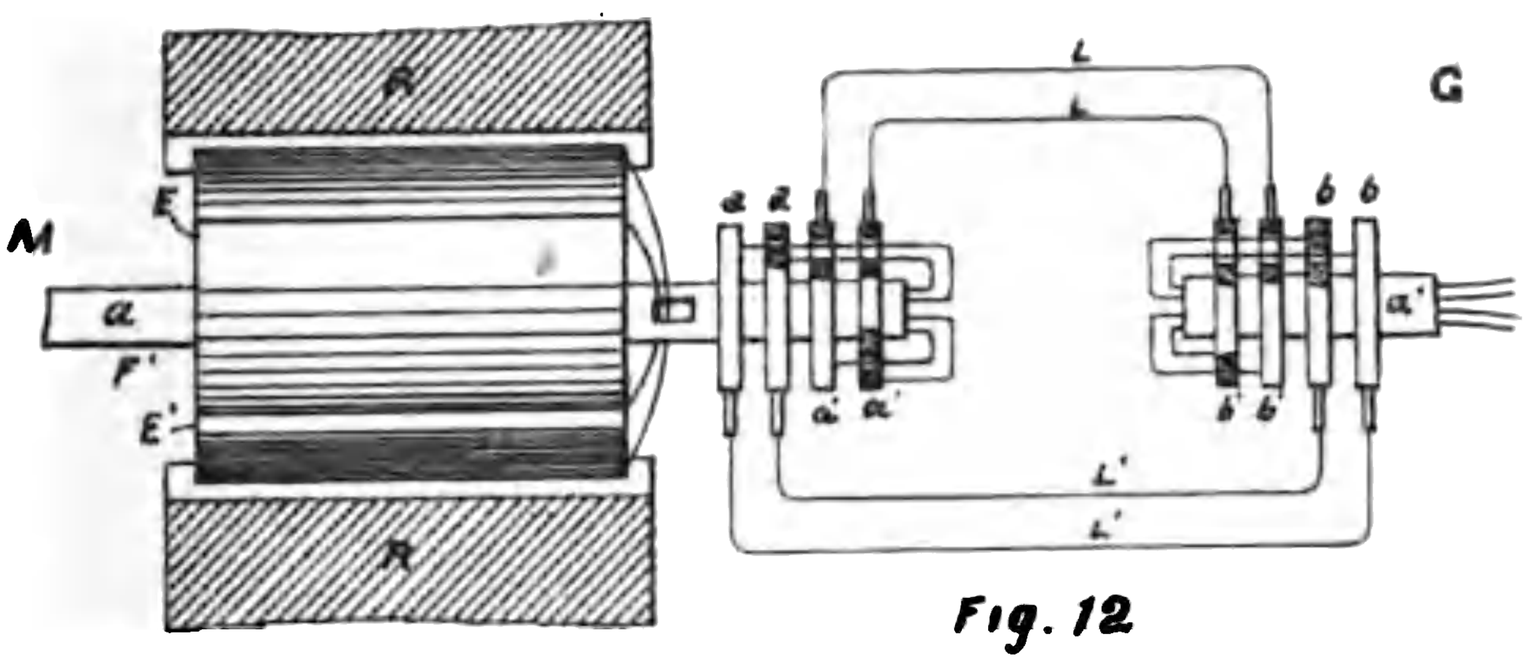

Fig. 12

WITNESSES:
D. H. Sherman.
Marvin A. Curtis.

INVENTOR.
Nikola Tesla.
BY
Duncan, Curtis & Page
ATTORNEYS.

(No Model.) 4 Sheets—Sheet 3.

N. TESLA.

ELECTRICAL TRANSMISSION OF POWER.

No. 382,280. Patented May 1, 1888.

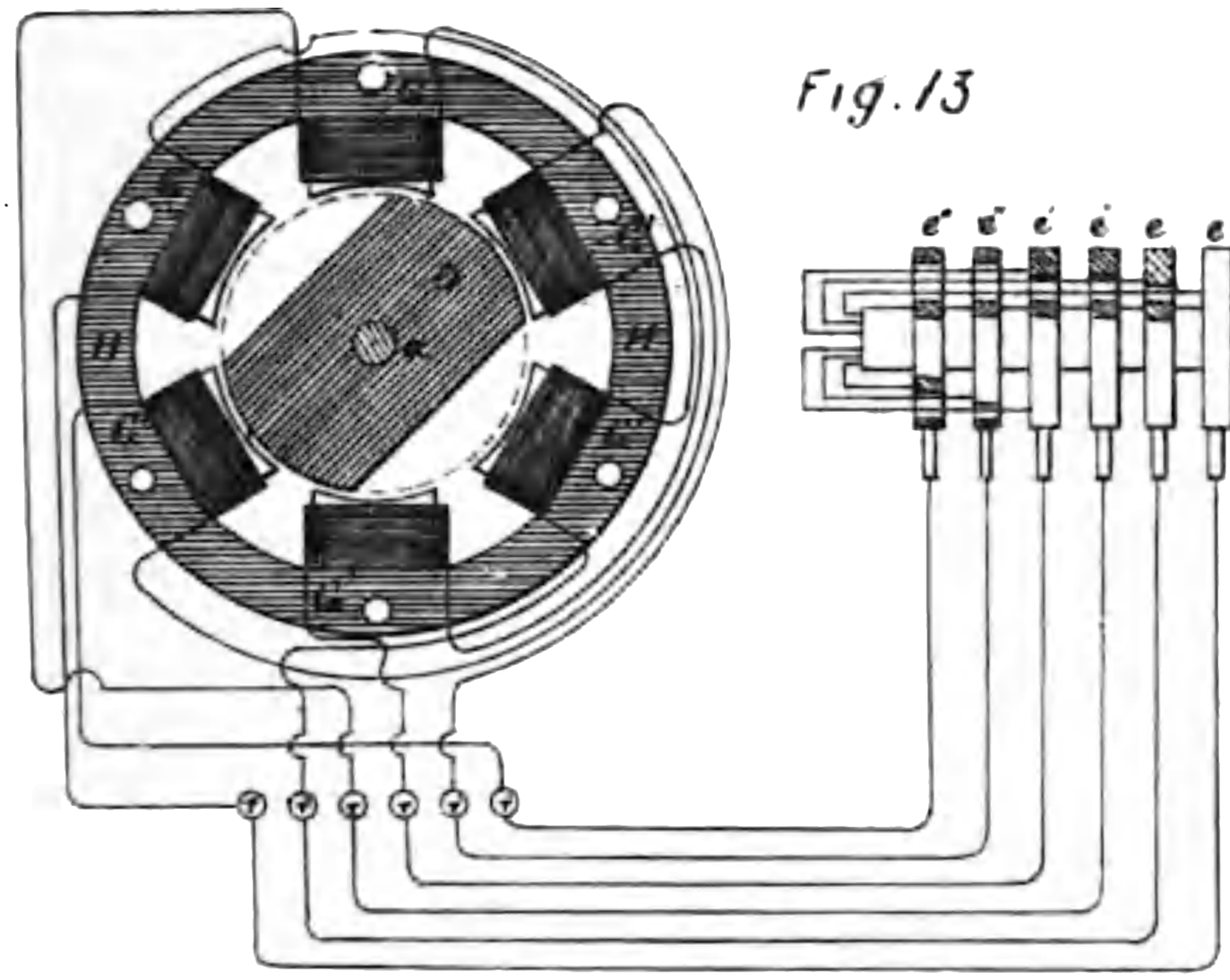

Fig. 13

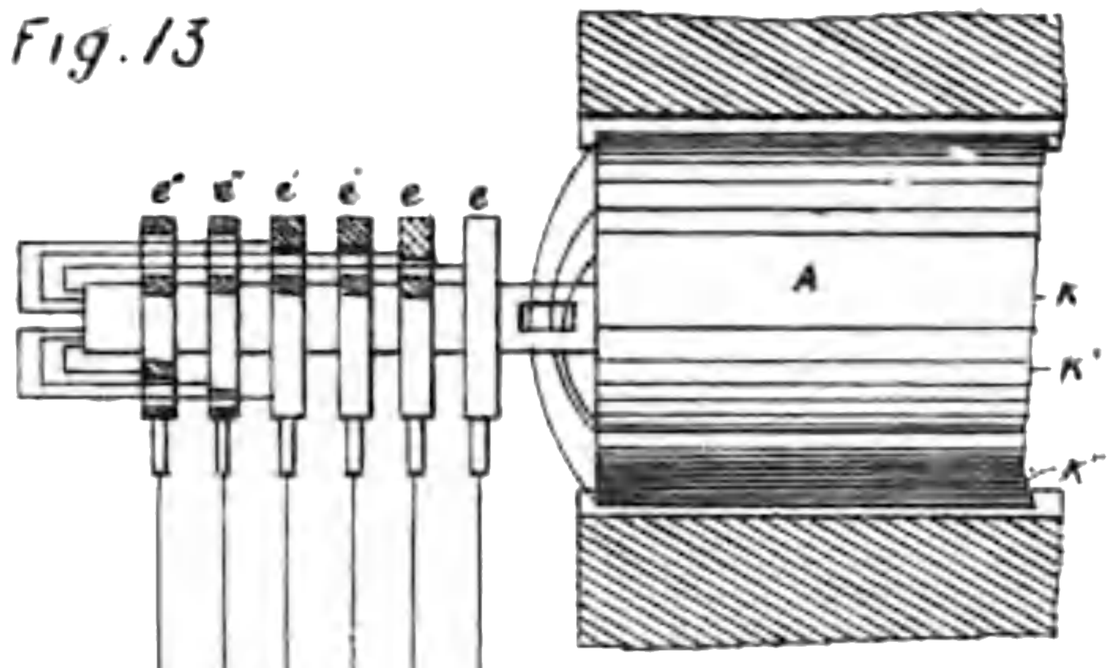

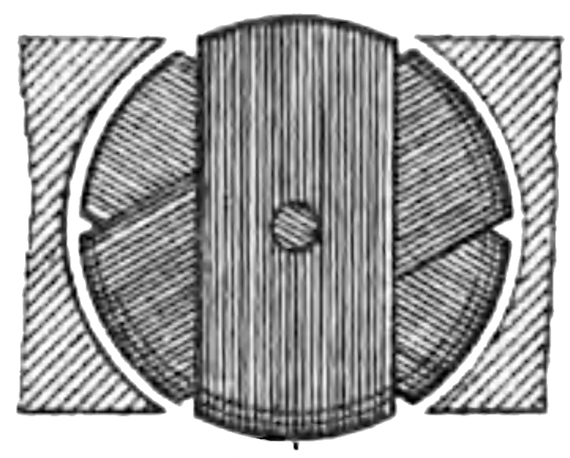

Fig. 14

Fig. 15

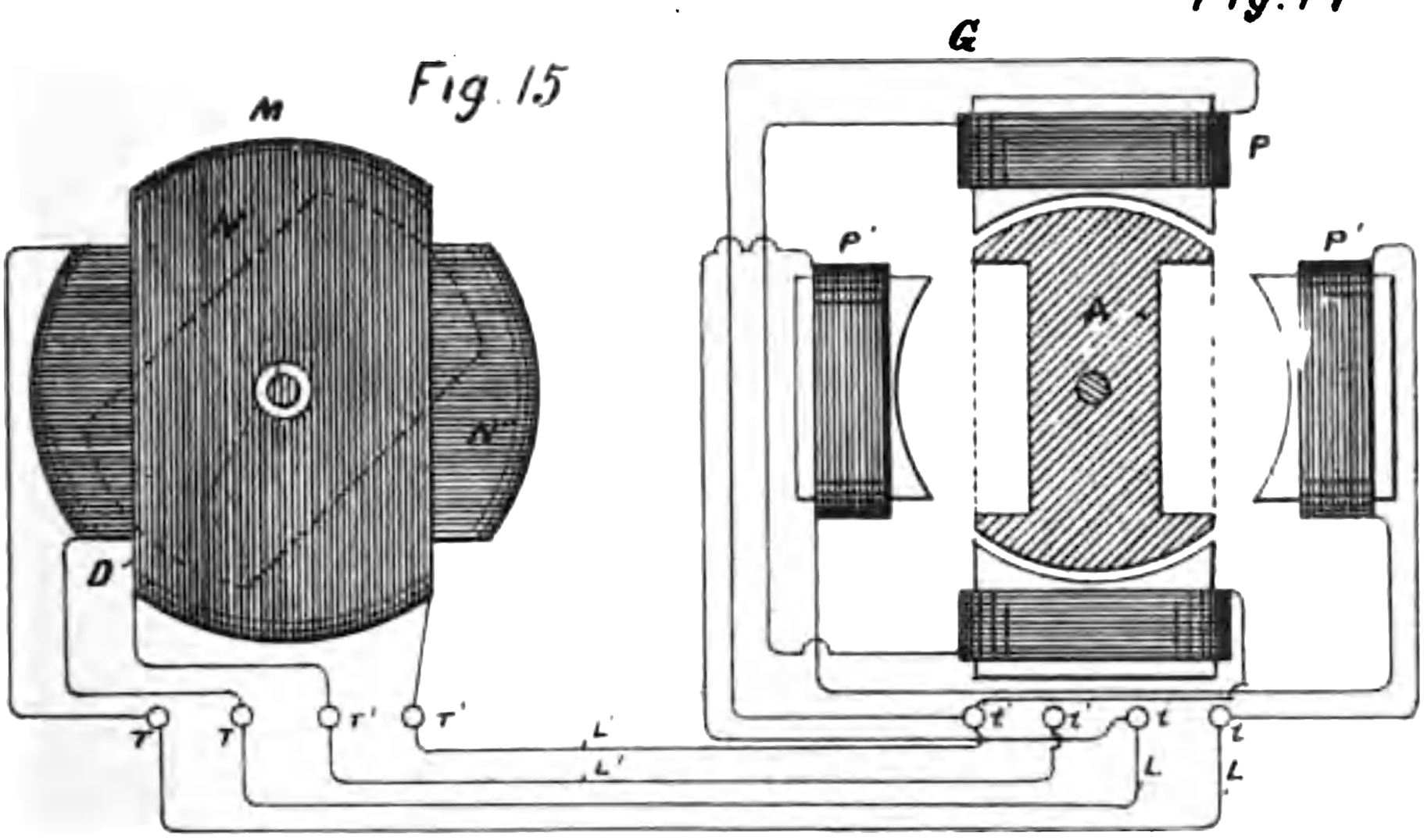

Fig. 16

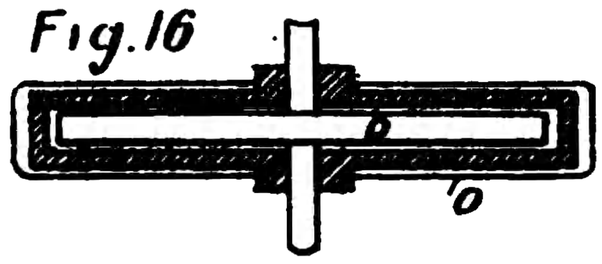

WITNESSES:
D. H. Sherman
Marvin A. Curtis.

INVENTOR.
Nikola Tesla.
BY
Duncan, Curtis & Page.
ATTORNEYS.

(No Model.) 4 Sheets—Sheet 4.

N. TESLA.

ELECTRICAL TRANSMISSION OF POWER.

No. 382,280. Patented May 1, 1888.

Fig. 17

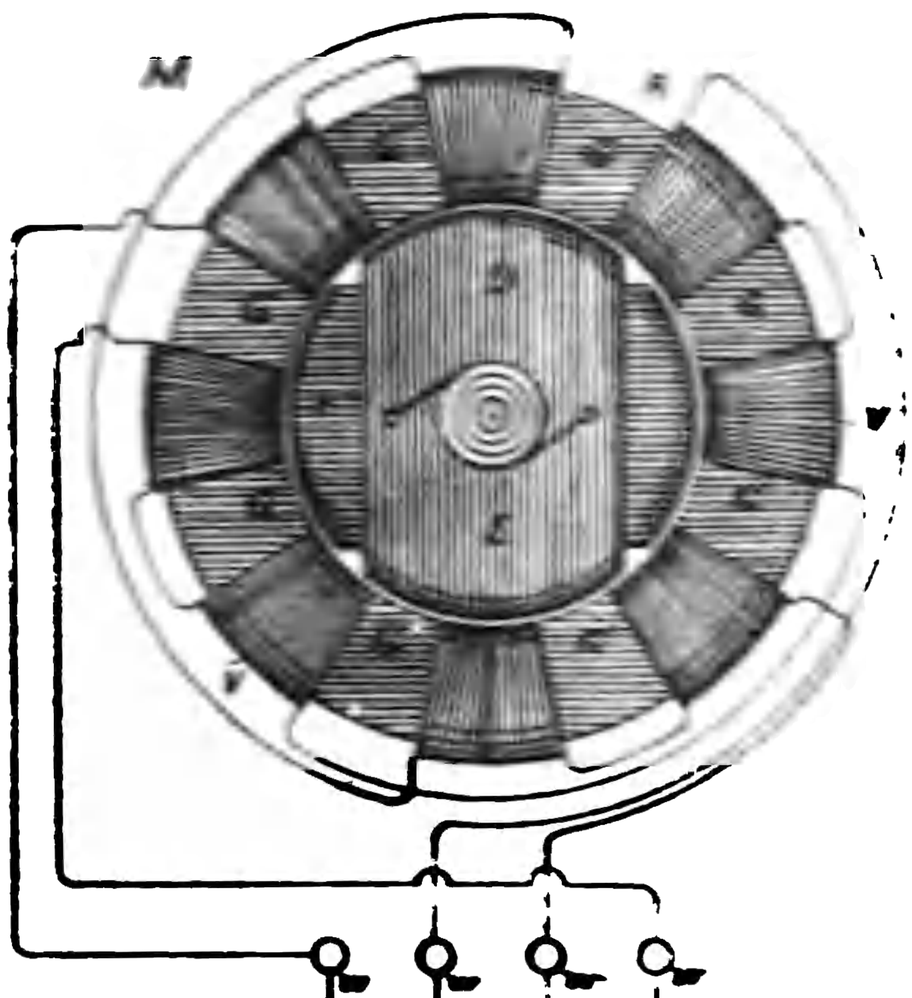

G

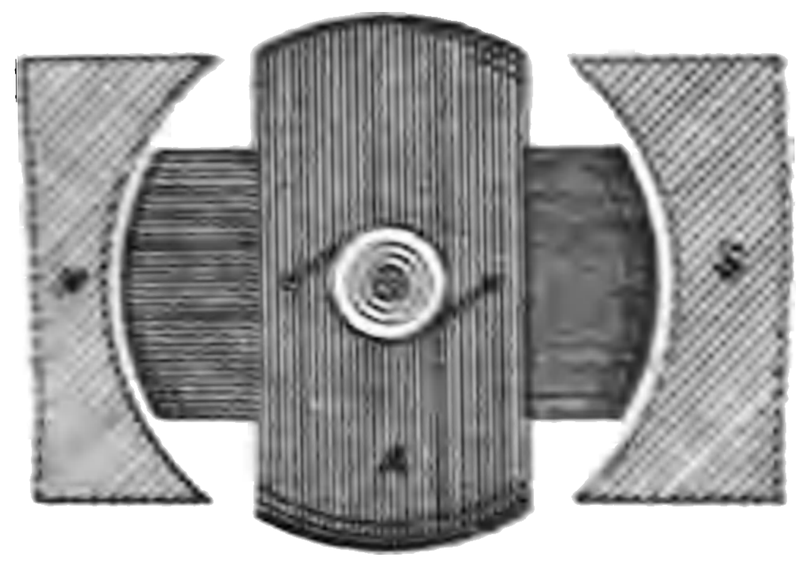

Fig. 18

Fig. 19

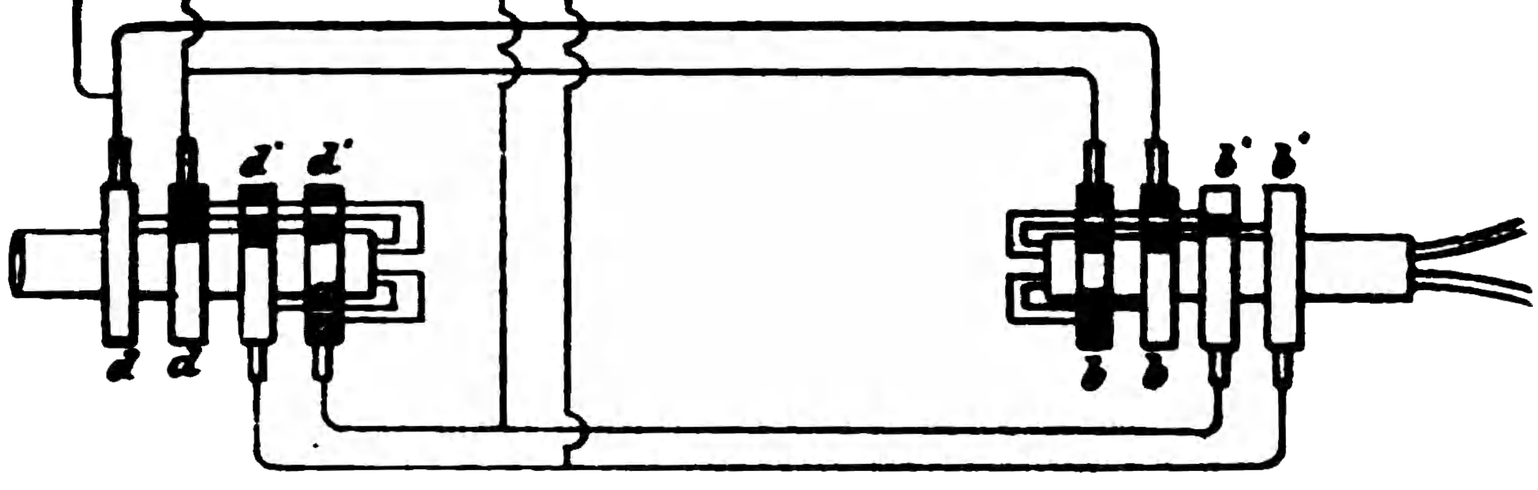

WITNESSES:
D. H. Sherman.
Marvin A. Curtis.

INVENTOR.
Nikola Tesla.
BY
Duncan, Curtis & Page
ATTORNEYS.

UNITED STATES PATENT OFFICE.

NIKOLA TESLA, OF NEW YORK, N. Y.

ELECTRICAL TRANSMISSION OF POWER.

SPECIFICATION forming part of Letters Patent No. 382,280, dated May 1, 1888.

Original application filed October 12, 1887. Serial No. 252,132. Divided and this application filed March 9, 1888. Serial No. 266,756. (No model.)

To all whom it may concern:

Be it known that I, NIKOLA TESLA, from Smiljan, Lika, border country of Austria-Hungary, and residing in the city, county, and State of New York, have invented certain new and useful Improvements in the Transmission of Power, of which the following is a specification, reference being had to the drawings accompanying and forming a part of the same.

This application is a division of an application filed by me October 12, 1887, No. 252,132.

The practical solution of the problem of the electrical conversion and transmission of mechanical energy involves certain requirements which the apparatus and systems heretofore employed have not been capable of fulfilling. Such a solution primarily demands a uniformity of speed in the motor irrespective of its load within its normal working limits. On the other hand, it is necessary, to attain a greater economy of conversion than has heretofore existed, to construct cheaper and more reliable and simple apparatus, and such that all danger from the use of currents of high tension, which are necessary to an economical transmission, may be avoided.

My present invention is a new method or mode of effecting the transmission of power by electrical agency, whereby many of the present objections are overcome and great economy and efficiency secured.

In carrying out my invention I employ a motor in which there are two or more independent energizing-circuits, through which I pass, in the manner hereinafter described, alternating currents, effecting thereby a progressive shifting of the magnetism or of the "lines of force," which, in accordance with well-known theories, produces the action of the motor.

It is obvious that a proper progressive shifting of the lines of force may be utilized to set up a movement or rotation of either element of the motor, the armature, or the field-magnet, and that if the currents directed through the several circuits of the motor are in proper direction no commutator for the motor will be required; but to avoid all the usual commutating appliances in the system I connect the motor-circuits directly with those of a suitable alternating-current generator. The practical results of such a system, its economical advantages, and the mode of its construction and operation will be described more in detail by reference to the accompanying diagrams and drawings.

Figures 1 to 8 and 1ª to 8ª, inclusive, are diagrams illustrating the principle of the action of my invention. The remaining figures are views of the apparatus in various forms by means of which the invention may be carried into effect, and which will be described in their order.

Referring first to Fig. 9, which is a diagrammatic representation of a motor, a generator, and connecting-circuits in accordance with my invention, M is the motor, and G the generator for driving it. The motor comprises a ring or annulus, R, preferably built up of thin insulated iron rings or annular plates, so as to be as susceptible as possible to variations in its magnetic condition. This ring is surrounded by four coils of insulated wire symmetrically placed and designated by C C C′ C′. The diametrically-opposite coils are connected up so as to co-operate in pairs in producing free poles on diametrically-opposite parts of the ring. The four free ends thus left are connected to terminals T T T′ T′, as indicated. Near the ring, and preferably inside of it, there is mounted on an axis or shaft a magnetic disk, C, generally circular in shape, but having two segments, cut away as shown. This disk is mounted so as to turn freely within the ring R. The generator G is of any ordinary type, that shown in the present instance having field-magnets N S and a cylindrical armature-core, A, wound with the two coils B B′. The free ends of each coil are carried through the shaft *a′* and connected, respectively, to insulated contact-rings *b b b′ b′*. Any convenient form of collector or brush bears on each ring and forms a terminal by which the current to and from a ring is conveyed. These terminals are connected to the terminals of the motor by the wires L and L′ in the manner indicated, whereby two complete circuits are formed, one including, say, the coils B of the generator and C C of the motor and the other the remaining coils B and C C′ of the generator and the motor.

It remain[illegible] to [illegible]in the mode of operation. [illegible] for this purpose I

refer to the diagrams, Figs. 1 to 8 and 1ª to 8ª, for an illustration of the various phases through which the coils of the generator pass when in operation, and the corresponding and resultant magnetic changes produced in the motor. The revolution of the armature of the generator between the field-magnets N S obviously produces in the coils B B′ alternating currents the intensity and direction of which depend upon well-known laws. In the position of the coils indicated in Fig. 1 the current in the coil B is practically *nil*, whereas the coil B′ at the same time is developing its maximum current, and by the means indicated in the description of Fig. 9 the circuit including this coil may also include, say the coils C C of the motor, Fig. 1ª. The result, with the proper connections, would be the magnetization of the ring R, the poles being on the line N S. The same order of connections being observed between the coil B and the coil C′, the latter when traversed by a current tend to fix the poles at right angles to the line N S of Fig. 1ª. It results, therefore, that when the generator-coils have made one-eighth of a revolution, reaching the position shown in Fig. 2, both pairs of coils, C and C′, will be traversed by current and act in opposition in so far as the location of the poles is concerned. The position of the poles will therefore be the resultant of the magnetizing forces of the coils—that is to say, it will advance along the ring to a position corresponding to one-eighth of the revolution of the armature of the generator.

In Fig. 3 the armature of the generator has progressed to one-fourth of a revolution. At the point indicated the current in the coil B is maximum, while in B′ it is *nil*, the latter coil being in its neutral position. The poles of the ring R in Fig. 3ª will in consequence be shifted to a position ninety degrees from that at the start, as shown. I have in like manner shown the conditions existing at each successive eighth of one revolution in the remaining figures. A short reference to these figures will suffice to an understanding of their significance.

Figs. 4 and 4ª illustrate the conditions which exist when the generator-armature has completed three-eighths of a revolution. Here both coils are generating currents; but the coil B′, having now entered the opposite field, is generating a current in the opposite direction having the opposite magnetizing effect; hence the resultant pole will be on the line N S, as shown.

In Fig. 5 one-half of one revolution of the armature of the generator has been completed, and the resulting magnetic condition of the ring is shown in Fig. 5ª. In this phase coil B is in the neutral position, while coil B′ is generating its maximum current, which is in the same direction as in Fig. 4. The poles will consequently be shifted through one half of the ring.

In Fig. 6 the armature has completed five-eighths of a revolution. In this position coil B′ develops a less powerful current, but in the same direction as before. The coil B, on the other hand, having entered a field of opposite polarity, generates a current of opposite direction. The resultant poles will therefore be in the line N S, Fig. 6ª; or, in other words, the poles of the ring will be shifted along five-eighths of its periphery.

Figs. 7 and 7ª in the same manner illustrate the phases of the generator and ring at three-quarters of a revolution, and Figs. 8 and 8ª the same at seven eighths of a revolution of the generator-armature. These figures will be readily understood from the foregoing.

When a complete revolution is accomplished, the conditions existing at the start are re-established, and the same action is repeated for the next and all subsequent revolutions, and in general it will now be seen that every revolution of the armature of the generator produces a corresponding shifting of the poles or lines of force around the ring. This effect I utilize in producing the rotation of a body or armature in a variety of ways—for example, applying the principle above described to the apparatus shown in Fig. 9. The disk D, owing to its tendency to assume that position in which it embraces the greatest possible number of the magnetic lines, is set in rotation, following the motion of the lines or the points of greatest attraction.

The disk D in Fig. 9 is shown as cut away on opposite sides; but this I have found is not essential to effecting its rotation, as a circular disk, as indicated by dotted lines, is also set in rotation. This phenomenon I attribute to a certain inertia or resistance inherent in the metal to the rapid shifting of the lines of force through the same, which results in a continuous tangential pull upon the disk, causing its rotation. This seems to be confirmed by the fact that a circular disk of steel is more effectively rotated than one of soft iron, for the reason that the former is assumed to possess a greater resistance to the shifting of the magnetic lines.

In illustration of other forms of apparatus by means of which I carry out my invention, I shall now describe the remaining figures of the drawings.

Fig. 10 is a view in elevation and part vertical section of a motor. Fig. 12 is a top view of the same with the field in section and a diagram of connections. Fig. 11 is an end or side view of a generator with the fields in section. This form of motor may be used in place of that shown.

D is a cylindrical or drum armature-core, which, for obvious reasons, should be split up as far as practicable to prevent the circulation within it of currents of induction. The core is wound longitudinally with two coils, E and E′, the ends of which are respectively connected to insulated contact-rings *d d′ d′*, carried by the shaft *a*, upon which the armature is mounted.

The armature is set to revolve within an

iron shell, R, which constitutes the field-magnet or other element of the motor. This shell is preferably formed with a slot or opening, *r*; but it may be continuous, as shown by the dotted lines, and in this event it is preferably made of steel. It is also desirable that this shell should be divided up similarly to the armature, and for similar reasons. As a generator for driving this motor, I may use the device shown in Fig. 11. This represents an annular or ring armature, A, surrounded by four coils, F F F′ F′, of which those diametrically opposite are connected in series, so that four free ends are left, which are connected to the insulated contact-rings *b b b′ b′*. The ring is suitably mounted on a shaft, *a′*, between the poles N S. The contact-rings of each pair of generator coils are connected to those of the motor, respectively, by means of contact-brushes and the two pairs of conductors, L L and L′ L′, as indicated diagrammatically in Fig. 18

Now, it is obvious from a consideration of the preceding figures that the rotation of the generator-ring produces currents in the coils F F′, which, being transmitted to the motor-coils, impart to the core of the latter magnetic poles constantly shifting or whirling around the core. This effect sets up a rotation of the armature, owing to the attractive force between the shell and the poles of the armature; but inasmuch as the coils in this case move relatively to the shell or field-magnet the movement of the coils is in the opposite direction to the progressive shifting of the poles.

Other arrangements of the coils of both generator and motor are possible, and a greater number of circuits may be used, as will be seen in the two succeeding figures.

Fig. 13 is a diagrammatic illustration of a motor and a generator connected and constructed in accordance with my invention. Fig. 14 is an end view of the generator with its field-magnets in section.

The field of the motor M is produced by six magnetic poles, G′ G′, secured to or projecting from a ring or frame, H. These magnets or poles are wound with insulated coils, those diametrically opposite to each other being connected in pairs, so as to produce opposite poles in each pair. This leaves six free ends, which are connected to the terminals T T T′ T′ T″ T″. The armature which is mounted to rotate between the poles is a cylinder or disk, D, of wrought-iron, mounted on the shaft *a*. Two segments of the same are cut away, as shown. The generator for this motor has in this instance an armature, A, wound with three coils, K K′ K″, at sixty degrees apart. The ends of these coils are connected, respectively, to insulated contact rings *e e e′ e′ e″ e″*. These rings are connected to those of the motor in proper order by means of collecting-brushes and six wires, forming three independent circuits. The variations in the strength and direction of the currents transmitted through these circuits and traversing the coils of the motor produce a steadily-progressive shifting of the resultant attractive force exerted by the poles G′ upon the armature D, and consequently keep the armature rapidly rotating. The peculiar advantage of this disposition is in obtaining a more concentrated and powerful field. The application of this principle to systems involving multiple circuits generally will be understood from this apparatus.

Referring now to Figs. 15 and 16, Fig. 15 is a diagrammatic representation of a modified disposition of my invention. Fig. 16 is a horizontal cross-section of the motor. In this case a disk, D, of magnetic metal, preferably cut away at opposite edges, as shown in dotted lines in the figure, is mounted so as to turn freely inside two stationary coils, N′ N″, placed at right angles to one another. The coils are preferably wound on a frame, O, of insulating material, and their ends are connected to the fixed terminals T T T′ T′. The generator G is a representative of that class of alternating-current machines in which a stationary induced element is employed. That shown consists of a revolving permanent or electro-magnet, A, and four independent stationary magnets, P P′, wound with coils, those diametrically opposite to each other being connected in series and having their ends secured to the terminals *t t t′ t′*. From these terminals the currents are led to the terminals of the motor, as shown in the drawings. The mode of operation is substantially the same as in the previous cases, the currents traversing the coils of the motor having the effect to turn the disk D. This mode of carrying out the invention has the advantage of dispensing with the sliding contacts in the system.

In the forms of motor above described only one of the elements—the armature or the field-magnet—is provided with energizing-coils. It remains, then, to show how both elements may be wound with coils. Reference is therefore had to Figs. 17, 18, and 19. Fig. 17 is an end view of such a motor. Fig. 18 is a similar view of the generator, with the field-magnets in section; and Fig. 19 is a diagram of the circuit-connections. In Fig. 17 the field-magnet of the motor consists of a ring, R, preferably of thin insulated iron sheets or bands, with eight pole-pieces, G, and corresponding recesses in which four pairs of coils, V, are wound. The diametrically opposite pairs of coils are connected in series and the free ends connected to four terminals, *w*, the rule to be followed in connecting being the same as hereinbefore explained. An armature, D, with two coils, E E′, at right angles to each other, is mounted to rotate inside of the field-magnet R. The ends of the armature-coils are connected to two pairs of contact-rings, *d d d′ d′*. The generator for this motor may be of any suitable kind to produce currents of the desired character. In the present instance it consists of a field-magnet, N S, and an armature, A, with two coils at right angles, the ends of which are connected to four contact-

rings, *b b' b'*, carried by its shaft. The circuit-connections are established between the rings on the generator-shaft and those on the motor-shaft by collecting brushes and wires, as previously explained. In order to properly energize the field-magnet of the motor, however, the connections are so made with the armature-coils by wires leading thereto that while the points of greatest attraction or greatest density of magnetic lines of force upon the armature are shifted in one direction those upon the field-magnet are made to progress in an opposite direction. In other respects the operation is identically the same as in the other cases cited. This arrangement results in an increased speed of rotation.

In Figs. 17 and 19, for example, the terminals of each set of field-coils are connected with the wires to the two armature-coils in such a way that the field-coils will maintain opposite poles in advance of the poles of the armature.

In the drawings the field-coils are in shunts to the armature; but they may be in series or in independent circuits.

It is obvious that the same principle may be applied to the various typical forms of motor hereinbefore described.

Having now described the nature of my invention and some of the various ways in which it is or may be carried into effect, I would call attention to certain characteristics which the applications of the invention possess, and the advantages which it offers.

In my motor, considering, for convenience, that represented in Fig. 9, it will be observed that since the disk D has a tendency to follow continuously the points of greatest attraction, and since these points are shifted around the ring once for each revolution of the armature of the generator, it follows that the movement of the disk D will be synchronous with that of the armature A. This feature by practical demonstration I have found to exist in all other forms in which one revolution of the armature of the generator produces a shifting of the poles of the motor through three hundred and sixty degrees.

In the particular modification shown in Fig. 15, or in others constructed on a similar plan, the number of alternating impulses resulting from one revolution of the generator-armature is double as compared with the preceding cases, and the polarities in the motor are shifted around twice by one revolution of the generator-armature. The speed of the motor will therefore be twice that of the generator. The same result is evidently obtained by such a disposition as that shown in Fig. 17, where the poles of both elements are shifted in opposite directions.

Again, considering the apparatus illustrated by Fig. 9 as typical of the invention, it is obvious that since the attractive effect upon the disk D is greatest when the disk is in its proper relative position to the poles developed in the ring R—that is to say, when its ends or poles immediately follow those of the ring—the speed of the motor for all loads within the normal working limits of the motor will be practically constant.

It is clearly apparent that the speed can never exceed the arbitrary limit as determined by the generator, and also that within certain limits, at least, the speed of the motor will be independent of the strength of the current.

It will now be more readily seen from the above description how far the requirements of a practical system of electrical transmission of power are realized in my invention. I secure, first, a uniform speed under all loads within the normal working limits of the motor without the use of any auxiliary regulator; second, synchronism between the motor and the generator; third, greater efficiency by the more direct application of the current, no commutating devices being required on either the motor or the generator; fourth, cheapness and simplicity of mechanical construction; fifth, the capability of being very easily managed or controlled, and, sixth, diminution of danger from injury to persons and apparatus.

These motors may be run in series—multiple arc or multiple series—under conditions well understood by those skilled in the art.

I am aware that it is not new to produce the rotations of a motor by intermittently shifting the poles of one of its elements. This has been done by passing through independent energizing-coils on one of the elements the current from a battery or other source of direct or continuous currents, reversing such current by suitable mechanical appliances, so that it is directed through the coils in alternately opposite directions. In such cases, however, the potential of the energizing-currents remains the same, their direction only being changed. According to my invention, however, I employ true alternating currents; and my invention consists in the discovery of the mode or method of utilizing such currents.

The difference between the two plans and the advantages of mine are obvious. By producing an alternating current each impulse of which involves a rise and fall of potential I reproduce in the motor the exact conditions of the generator, and by such currents and the consequent production of resultant poles the progression of the poles will be continuous and not intermittent. In addition to this, the practical difficulty of interrupting or reversing a current of any considerable strength is such that none of the devices at present could be made to economically or practically effect the transmission of power by reversing in the manner described a continuous or direct current. In so far, then, as the plan of acting upon one element of the motor is concerned, my invention involves the use of an alternating as distinguished from a reversed current, or a current which, while continuous and direct, is shifted from coil to coil by any form of commutator, reverser, or interrupter. With regard to that part of the invention which consists in acting upon both elements of the motor

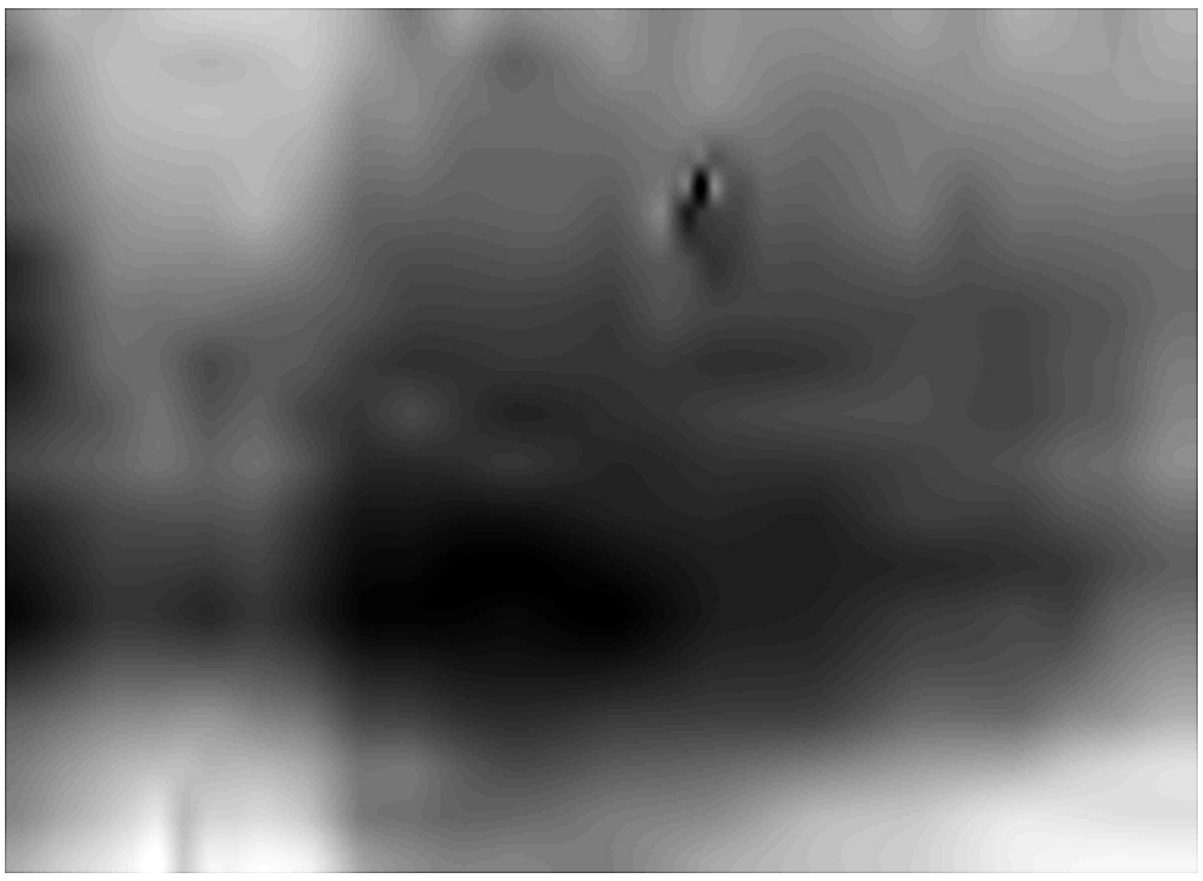

simultaneously, I regard the use of either alternating or reversed currents as within the scope of the invention, although I do not consider the use of reversed currents of any practical importance.

What I claim is—

The method herein described of electrically transmitting power, which consists in producing a continuously-progressive shifting of the polarities of either or both elements (the armature or field magnet or magnets) of a motor by developing alternating currents in independent circuits, including the magnetizing-coils of either or both elements, as herein set forth.

NIKOLA TESLA.

Witnesses:

FRANK B. MURPHY,

FRANK R. HARTLEY.

[redacted]

[redacted]

[redacted]

No. [redacted]

[redacted]

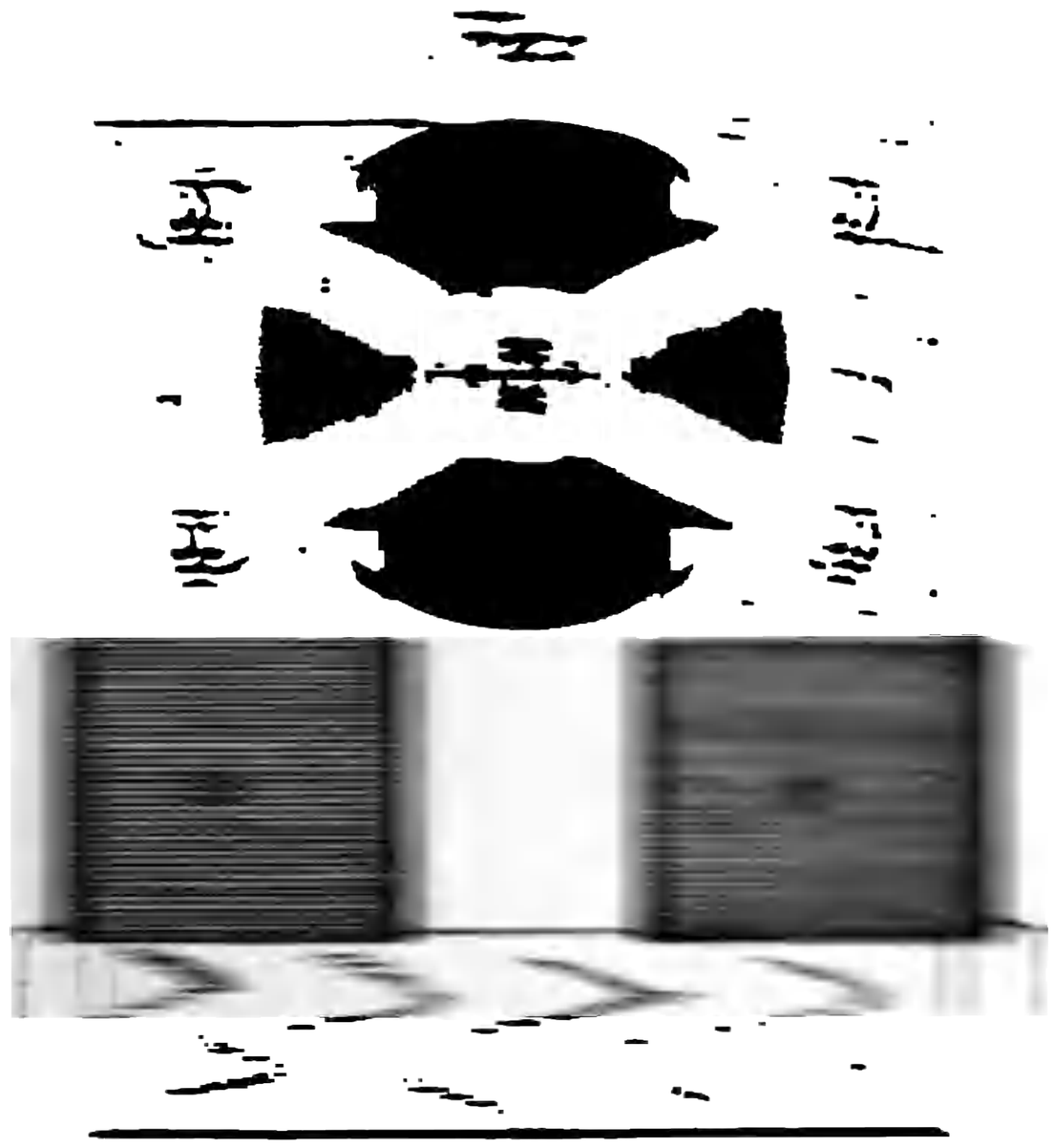

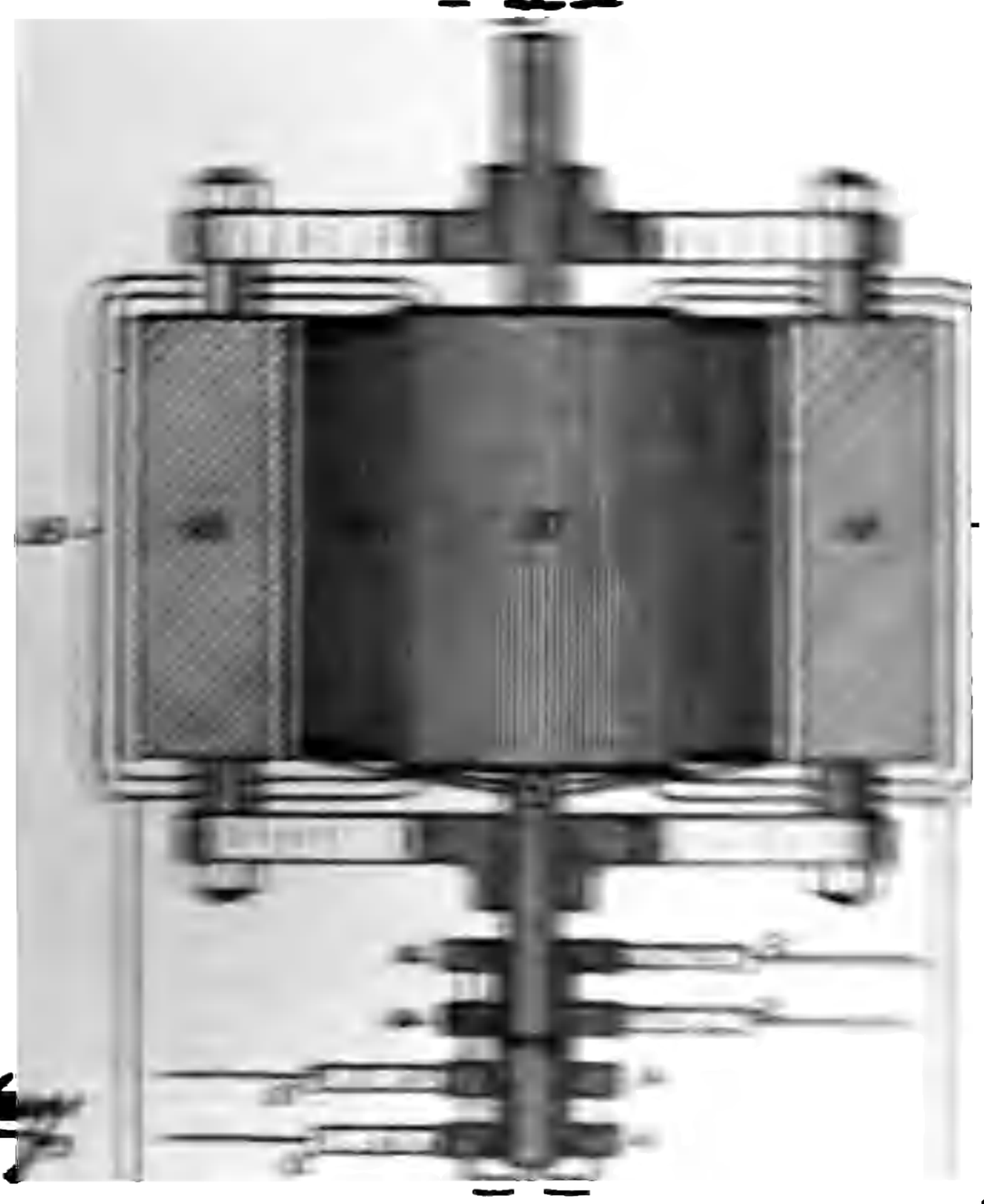

[redacted]

[redacted]

o Model.) 2 Sheets—Sheet 2.

N. TESLA.

ELECTRICAL TRANSMISSION OF POWER

No. 382,281. Patented May 1, 1888.

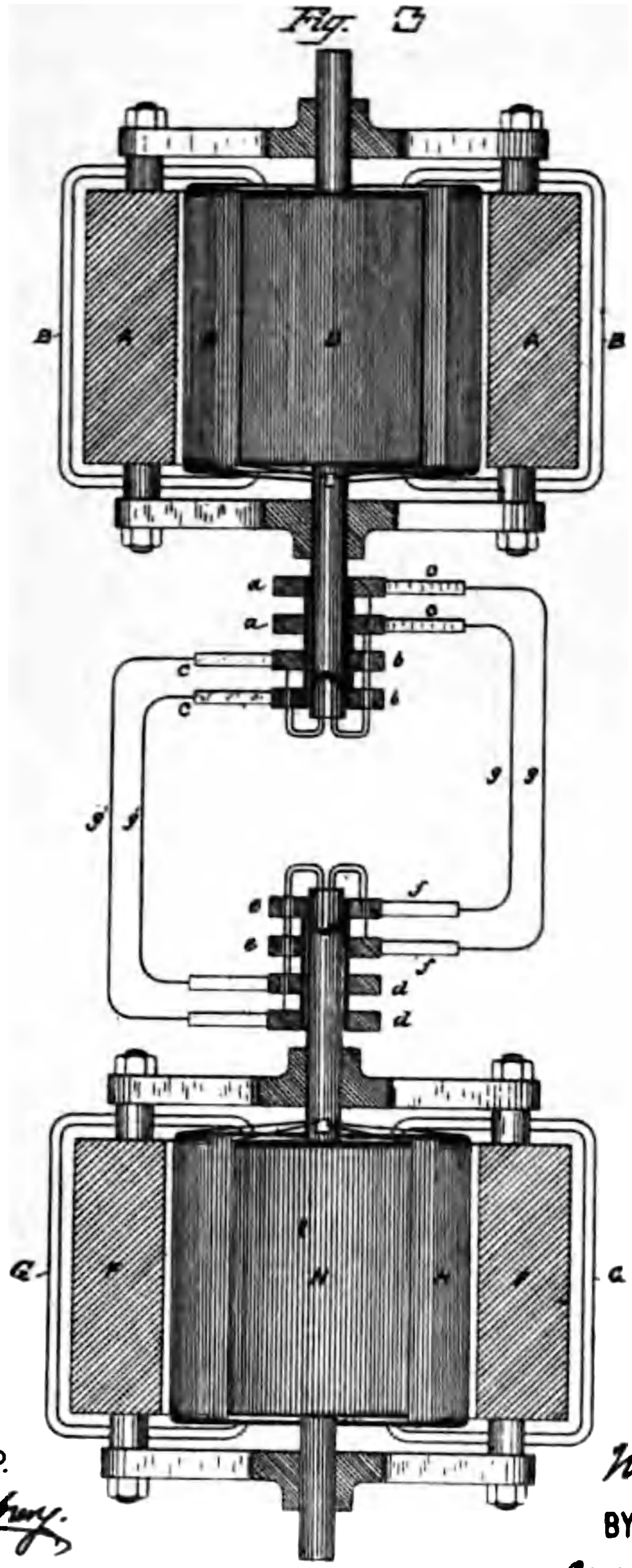

WITNESSES:
Joseph Letter.
Geo. F. Mowbray.

INVENTOR.
Nikola Tesla
BY Duncan, Curtis & Page
ATTORNEYS

UNITED STATES PATENT OFFICE.

NIKOLA TESLA, OF NEW YORK, N. Y.

ELECTRICAL TRANSMISSION OF POWER.

SPECIFICATION forming part of Letters Patent No. 382,281, dated May 1, 1888.
Original application filed November 30, 1887, Serial No. 256,562. Divided and this application filed March 9, 1888. Serial No. 266,756. (No model.)

To all whom it may concern:

Be it known that I, NIKOLA TESLA, from Smiljan, Lika, border country of Austria-Hungary, and residing in the city, county, and State of New York, have invented certain new and useful Improvements in the Electric Transmission of Power, of which the following is a specification, this application being a division of an application filed by me November 30, 1887, Serial No. 256,562.

In a previous application filed by me—viz., No. 252,132, filed October 12, 1887—I have set forth an improvement in motors and in the mode or method of operating the same, which, generally stated, consists in progressively and continuously shifting the poles or lines of maximum magnetic effect of either the field-magnets or armature, or both, of a motor, and thereby producing a movement of rotation in the motor. The means which I have shown for effecting this, while varying in detail, are exemplified in the following system, which, for present purposes, it will be sufficient to consider as a typical embodiment of the invention.

The motor is wound with coils forming independent energizing-circuits on the armature, which is a cylinder or disk mounted to rotate between two opposite magnetic poles. These coils are connected up with corresponding induced or current-producing circuits in an alternating-current generator. As a result of this, when the generator is set in motion, currents of alternately-opposite direction are directed through the energizing-coils of the motor in such manner as to produce a progressive shifting or rotation of the magnetic poles of the motor-armature. This movement of the poles of the armature obviously tends to rotate the armature in the opposite direction to that in which the movement of the poles takes place, owing to the attractive force between said poles and the field-magnets, and the speed of rotation increases from the start until it equals that of the generator, supposing both motor and generator to be alike.

As the magnetic poles of the armature are shifted in a direction opposite to that in which the armature rotates, it will be apparent that when the normal speed is attained the poles of the armature will assume a fixed position relatively to the field-magnets, and that in consequence the field-magnets will be energized by magnetic induction, exhibiting two distinct poles, one on each of the pole-pieces. In starting the motor, however, the speed of the armature being comparatively slow, the pole-pieces are subjected to rapid reversals of magnetic polarity; but as the speed increases these reversals become less and less frequent and finally cease, when the movement of the armature becomes synchronous with that of the generator. This being the case, the field-cores or the pole-pieces of the motor become a magnet, but by induction only.

I have found that advantageous results are secured by winding the field-magnets with a coil or coils and passing a continuous current through them, thus maintaining a permanent field, and in this feature my present invention consists.

I shall now describe the apparatus which I have devised for carrying out this invention and explain the mode of using or operating the same.

Figure 1 is an end view in elevation of my improved motor. Fig. 2 is a part horizontal central section, and Fig. 3 is a diagrammatic representation of the motor and generator combined and connected for operation.

Let A A in Fig. 1 represent the legs or pole-pieces of a field-magnet, around which are coils B B, included in the circuit of a continuous-current generator, C, which is adapted to impart magnetism to the said poles in the ordinary manner.

D D′ are two independent coils wound upon a suitable cylindrical or equivalent armature-core, which, like all others used in a similar manner, should be split or divided up into alternate magnetic and insulating parts in the usual way. This armature is mounted in non-magnetic cross-bars E E, secured to the poles of the field-magnet. The terminals of the armature-coils D D′ are connected to insulated sliding contact rings *a a b b*, carried by the armature-shaft, and brushes *c c* bear upon these rings to convey to the coils the currents which operate the motor.

The generator for operating this motor is or

may be of precisely identical construction, and for convenience of reference I have marked in Fig. 3 its parts, as follows: F F, the field-magnets energized by a continuous current passing in its field-coils G G; H H′, the coils carried by the cylindrical armature; *d d e e*, the friction or collecting rings carried by the armature-shaft and forming the terminals of the armature-coils; and *f f* the collecting-brushes which deliver the currents developed in the armature-coils to the two circuits *g g′*, which connect the generator with the motor.

The operation of this system will be understood from the foregoing. The action of the generator by causing a progressive shifting of the poles in the motor-armature sets up in the latter a rotation opposite in direction to that in which the poles move. If, now, the continuous current be directed through the field-coils so as to strongly energize the magnet A A, the speed of the motor, which depends upon that of the generator, will not be increased, but the power which produces its rotation will be increased in proportion to the energy supplied through the coils B B. It is characteristic of this motor that its direction of rotation is not reversed by reversing the direction of the current through its field-coils, for the direction of rotation depends not upon the polarity of the field, but upon the direction in which the poles of the armature are shifted. To reverse the motor the connections of either of the circuits *g g′* must be reversed.

I have found that if the field-magnet of the motor be strongly energized by its coils B B, and the circuits through the armature-coils closed, assuming the generator to be running at a certain speed, the motor will not start; but if the field be but slightly energized, or in general in such condition that the magnetic influence of the armature preponderates in determining its magnetic condition, the motor will start, and with sufficient current will reach its maximum or normal speed. For this reason it is desirable to keep at the start, and until the motor has attained its normal speed, or nearly so, the field-circuit open, or to permit but little current to pass through it. I have found, however, if the fields of both the generator and motor be strongly energized that starting the generator starts the motor, and that the speed of the motor is increased in synchronism with the generator.

Motors constructed and operated on this principle maintain almost absolutely the same speed for all loads within their normal working limits, and in practice I have observed that if the motor be overloaded to such an extent as to check its speed the speed of the generator, if its motive power be not too great, is diminished synchronously with that of the motor.

I have in other applications shown how the construction of these or similar motors may be varied in certain well-known ways—as, for instance, by rotating the field about a stationary armature or rotating conductors within the field—but I do not illustrate these features further herein, as with the illustration which I have given I regard the rest as within the power of a person skilled in the art to construct.

I am aware that a device embodying the characteristics of a motor and having a permanently-magnetized field-magnet has been operated by passing through independent coils on its armature a direct or continuous current in opposite directions. Such a system, however, I do not regard as capable of the practical applications for which my invention is designed, nor is it the same in principle or mode of operation, mainly in that the shifting of the poles is intermittent and not continuous, and that there is necessarily involved a waste of energy.

In my present application I do not limit myself to any special form of motor, nor of the means for producing the alternating currents as distinguished from what are called "reversed currents," and I may excite or energize the field of the motor and of the generator by any source of current which will produce the desired result.

What I claim is—

The method herein described of transmitting power by electro-magnetic motors, which consists in continuously and progressively shifting the poles of one element of the motor by alternating currents and magnetizing the other element by a direct or continuous current, as set forth.

NIKOLA TESLA.

Witnesses:
FRANK B. MURPHY,
FRANK E. HARTLEY.

(No Model.) 2 Sheets—Sheet 1.

N. TESLA.

METHOD OF CONVERTING AND DISTRIBUTING ELECTRIC CURRENTS.

No. 382,282. Patented May 1, 1888.

Fig. 1

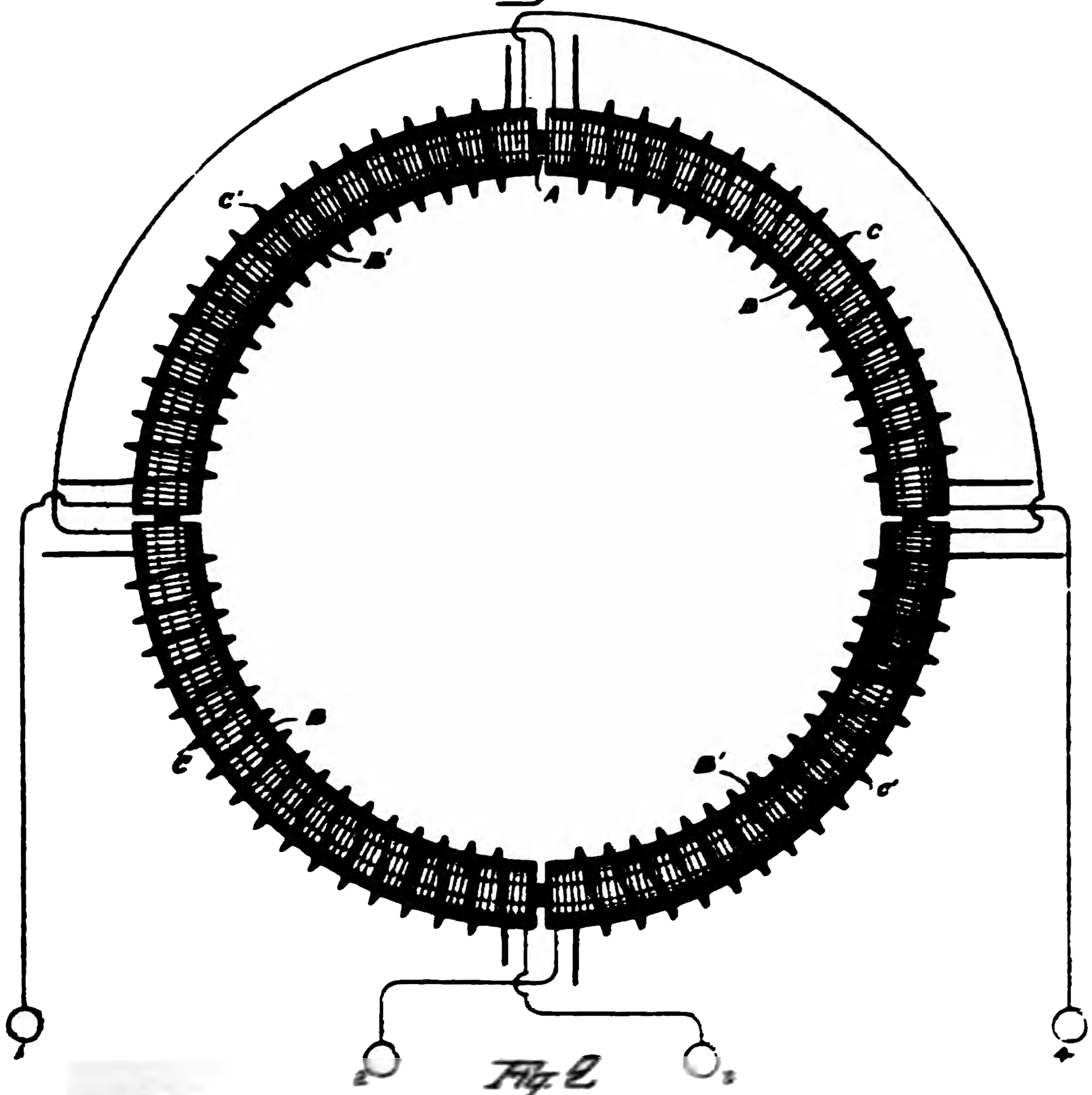

Fig. 2

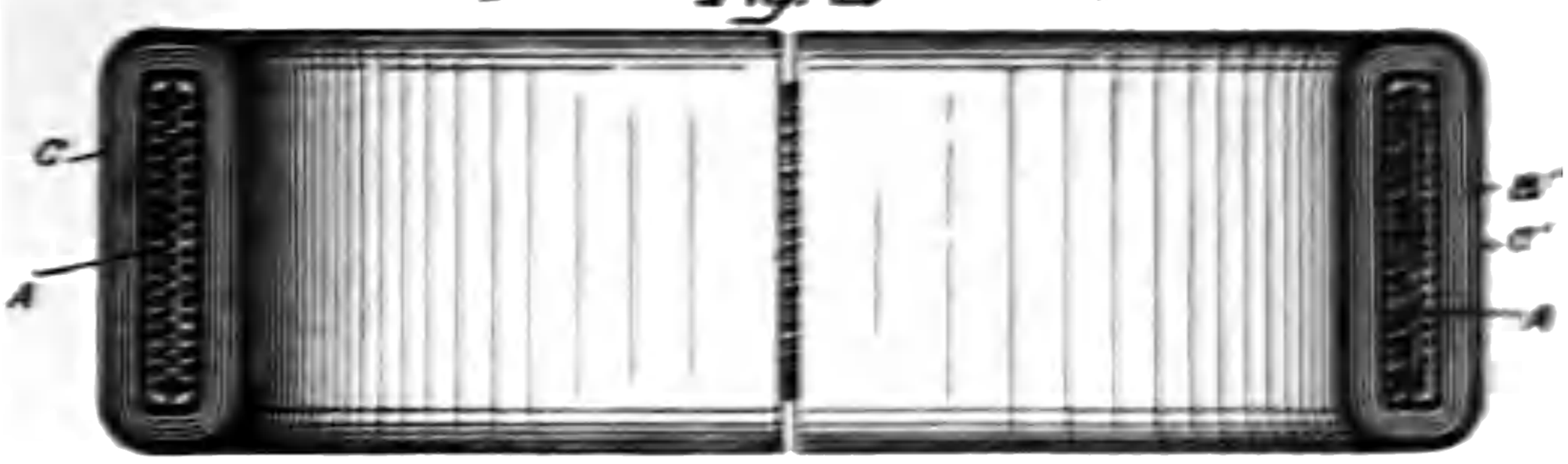

WITNESSES:
Raymond Hitter
Francis B. Murphy

INVENTOR.
Nikola Tesla
BY
Duncan, Curtis & Page
ATTORNEYS.

(No Model.) 2 Sheets—Sheet 2.

N. TESLA.

METHOD OF CONVERTING AND DISTRIBUTING ELECTRIC CURRENTS.

No. 382,282. Patented May 1, 1888.

Fig. 3

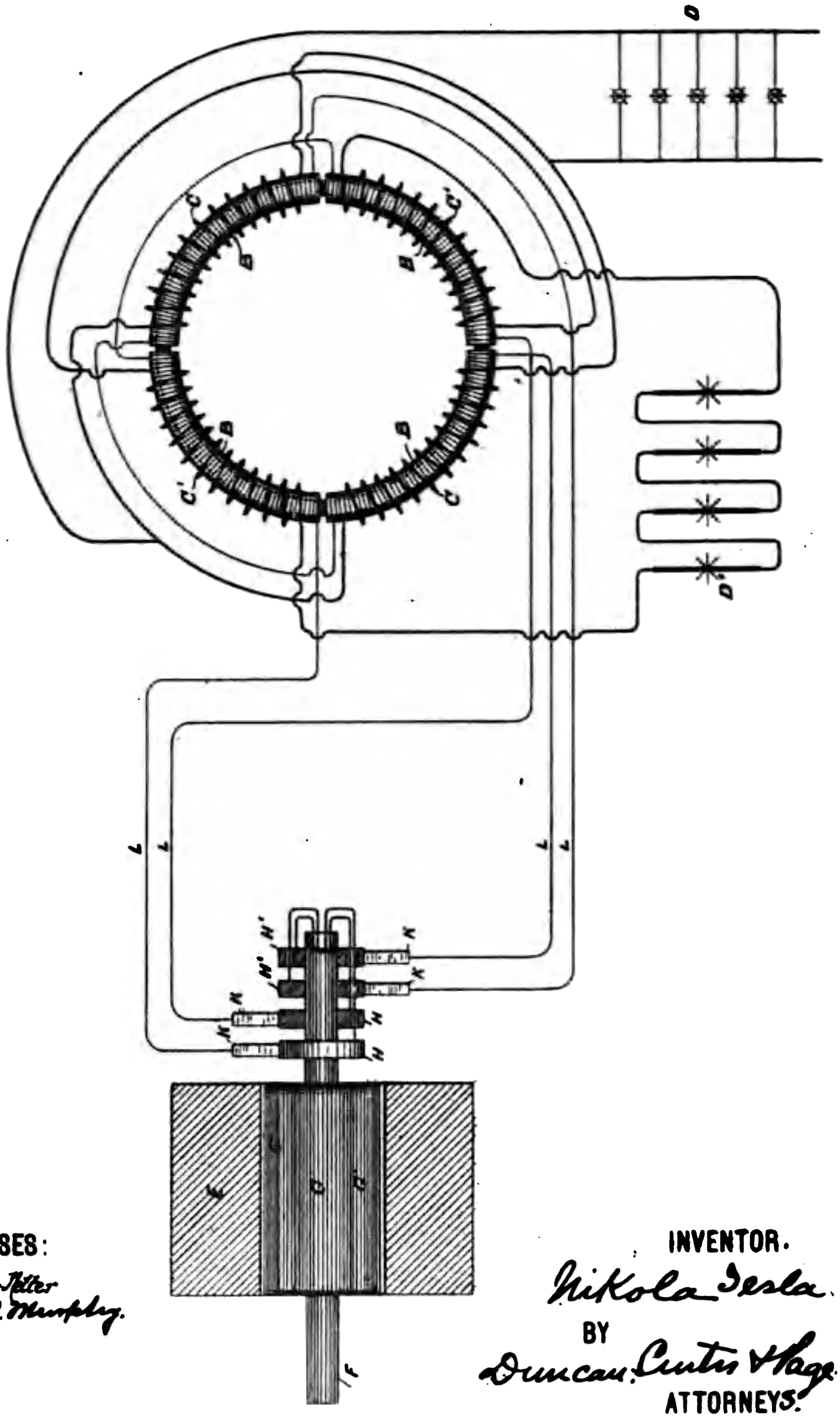

WITNESSES:

Ingersoll Miller
Frank B. Murphy.

INVENTOR.

Nikola Tesla.

BY

Duncan, Curtis & Page.

ATTORNEYS.

UNITED STATES PATENT OFFICE.

NIKOLA TESLA, OF NEW YORK, N. Y.

METHOD OF CONVERTING AND DISTRIBUTING ELECTRIC CURRENTS.

SPECIFICATION forming part of Letters Patent No. 382,282, dated May 1, 1888.

Original application filed December 23, 1887, Serial No. 258,787. Divided and th's application filed March 9, 1888. Serial No. 266,757. (No model.)

To all whom it may concern:

Be it known that I, NIKOLA TESLA, from Smiljan, Lika, border country of Austria-Hungary, and now residing at New York, in the county and State of New York, have invented certain new and useful Improvements in Methods of Converting and Distributing Electric Currents, of which the following is a specification, this application being a division of an application filed by me December 23, 1887, Serial No. 258,787.

This invention relates to those systems of electrical distribution in which a current from a single source of supply in a main or transmitting circuit is caused to induce, by means of suitable induction apparatus, a current or currents in an independent working circuit or circuits.

The main objects of the invention are the same as have been heretofore obtained by the use of these systems—viz., to divide the current from a single source, whereby a number of lamps, motors, or other translating devices may be independently controlled and operated by the same source of current, and in some cases to reduce a current of high potential in the main circuit to one of greater quantity and lower potential in the independent consumption or working circuit or circuits.

The general character of the devices employed in these systems is now well understood. An alternating-current magneto-machine is used as a source of supply. The current developed thereby is conducted through a transmission-circuit to one or more distant points, at which the transformers are located. These consist of induction-machines of various kinds. In some cases ordinary forms of induction-coil have been used with one coil in the transmitting-circuit and the other in a local or consumption circuit, the coils being differently proportioned, according to the work to be done in the consumption-circuit—that is to say, if the work requires a current of higher potential than that in the transmission-circuit the secondary or induced coil is of greater length and resistance than the primary, while, on the other hand, if a quantity current of lower potential is wanted, the longer coil is made the primary. In lieu of these devices various forms of electro dynamic induction-machines, including the combined motors and generators, have been devised. For instance, a motor is constructed in accordance with well-understood principles, and on the same armature are wound induced coils which constitute a generator. The motor coils are generally of fine wire and the generator-coils of coarser wire, so as to produce a current of greater quantity and lower potential than the line-current, which is of relatively high potential to avoid loss in long transmission. A similar arrangement is to wind coils corresponding to those described on a ring or similar core, and by means of a commutator of suitable kind to direct the current through the inducing-coils successively, so as to maintain a movement of the poles of the core or of the lines of force which set up the currents in the induced coils.

Without enumerating the objections to these systems in detail, it will suffice to say that the theory or the principle of the action or operation of these devices has apparently been so little understood that their proper construction and use have, up to the present time, been attended with various difficulties and great expense. The transformers are very liable to be injured and burned out, and the means resorted to for curing this and other defects have invariably been at the expense of efficiency. I have discovered a method of conversion and distribution, however, which is not subject to the defects and objections to which I have alluded, and which is both efficient and safe. I secure by it a conversion by true dynamic induction under highly efficient conditions and without the use of expensive or complicated apparatus or moving devices, which in use wear out and require attention. This method consists in progressively and continuously shifting the line or points of maximum effect in an inductive field across the convolutions of a coil or conductor within the influence of said field and included in or forming part of a secondary or translating circuit.

In carrying out my invention I provide a series of inducing-coils and corresponding induced coils which, by preference, I wind upon a core closed upon itself—such as an annulus or ring—subdivided in the usual manner. The two sets of coils are wound side by side or superposed or otherwise placed in well-known

ways to bring them into the most effective relations to one another and to the core. The inducing or primary coils wound on the core are divided into pairs or sets by the proper electrical connections, so that while the coils of one pair or set co-operate in fixing the magnetic poles of the core at two given diametrically-opposite points the coils of the other pair or set—assuming, for the sake of illustration, that there are but two—tend to fix the poles at ninety degrees from such points. With this induction device I use an alternating-current generator with coils or sets of coils to correspond with those of the converter, and by means of suitable conductors I connect up in independent circuits the corresponding coils of the generator and converter. It results from this that the different electrical phases in the generator are attended by corresponding magnetic changes in the converter; or, in other words, that as the generator-coils revolve the points of greatest magnetic intensity in the converter will be progressively shifted or whirled around. This principle I have applied under variously modified conditions to the operation of electro-magnetic motors, and in previous applications—notably in those having serial numbers 252,132 and 256,561—I have described in detail the manner of constructing and using such motors.

In the present application my object is to describe the best and most convenient manner of which I am at present aware of carrying out the invention as applied to a system of electrical distribution; but one skilled in the art will readily understand, from the description of the modifications proposed in said applications, wherein the form of both the generator and converter in the present case may be modified. In illustration, therefore, of the details of construction which my present invention involves, I now refer to the accompanying drawings.

Figure 1 is a diagrammatic illustration of the converter and the electrical connections of the same. Fig. 2 is a horizontal central cross-section of Fig. 1. Fig. 3 is a diagram of the circuits of the entire system, the generator being shown in section.

I use a core, A, which is closed upon itself—that is to say, of an annular, cylindrical, or equivalent form—and as the efficiency of the apparatus is largely increased by the subdivision of this core I make it of thin strips, plates, or wires of soft iron electrically insulated as far as practicable. Upon this core, by any well-known method, I wind, say, four coils, B B B′ B′, which I use as primary coils, and for which I use long lengths of comparatively fine wire. Over these coils I then wind shorter coils of coarser wire, C C C′ C′, to constitute the induced or secondary coils. The construction of this or any equivalent form of converter may be carried farther, as above pointed out, by inclosing these coils with iron—as, for example, by winding over the coils a layer or layers of insulated iron wire.

The device is provided with suitable binding-posts, to which the ends of the coils are led. The diametrically-opposite coils B B and B′ B′ are connected, respectively, in series, and the four terminals are connected to the binding-posts 1 2 3 4. The induced coils are connected together in any desired manner. For example, as shown in Fig. 3, C C may be connected in multiple arc when a quantity current is desired—as for running a group of incandescent lamps, D—while C′ C′ may be independently connected in series in a circuit including arc lamps D′, or the like.

The generator in this system will be adapted to the converter in the manner illustrated. For example, in the present case I employ a pair of ordinary permanent or electromagnets, E E, between which is mounted a cylindrical armature on a shaft, F, and wound with two coils, G G′. The terminals of these coils are connected, respectively, to four insulated contact or collecting rings, H H H′ H′, and the four line-circuit wires L connect the brushes K bearing on these rings to the converter in the order shown. Noting the results of this combination, it will be observed that at a given point of time the coil G is in its neutral position and is generating little or no current, while the other coil, G′, is in a position where it exerts its maximum effect. Assuming coil G to be connected in circuit with coils B B of the converter and coil G′ with coils B′ B′, it is evident that the poles of the ring A will be determined by coils B′ B′ alone; but as the armature of the generator revolves, coil G develops more current and coil G′ less until G reaches its maximum and G′ its neutral position. The obvious result will be to shift the poles of the ring A through one quarter of its periphery. The movement of the coils through the next quarter of a turn, during which coil G′ enters a field of opposite polarity and generates a current of opposite direction and increasing strength, while coil G is passing from its maximum to its neutral position, generates a current of decreasing strength and same direction as before, and causes a further shifting of the poles through the second quarter of the ring. The second half-revolution will obviously be a repetition of the same action. By the shifting of the poles of the ring A a power-dynamic inductive effect on the coils C C′ is produced. Besides the currents generated in the secondary coils by dynamo-magnetic induction, other currents will be set up in the same coils in consequence of any variations in the intensity of the poles in the ring A. This should be avoided by maintaining the intensity of the poles constant, to accomplish which care should be taken in designing and proportioning the generator and in distributing the coils in the ring A and balancing their effect. When this is done, the currents are produced by dynamo-magnetic induction only, the same result being obtained as though the poles were shifted by a commutator with an infinite number of segments.

The apparatus by means of which this method of conversion is or may be carried out may be varied almost indefinitely. The specific form which I have herein shown I regard as the best and most efficient, and in another application I have claimed it; but I do not limit myself herein to the use of any particular form or combination of devices which is or may be capable of effecting the same result in a similar way.

What I claim is—

1. The method of electrical conversion and distribution herein described, which consists in continuously and progressively shifting the points or line of maximum effect in an inductive field, and inducing thereby currents in the coils or convolutions of a circuit located within the inductive influence of said field, as herein set forth.

2. The method of electrical conversion and distribution herein described, which consists in generating in independent circuits producing an inductive field alternating currents in such order or manner as to produce by their conjoint effect a progressive shifting of the points of maximum effect of the field, and inducing thereby currents in the coils or convolutions of a circuit located within the inductive influence of the field, as set forth.

NIKOLA TESLA.

Witnesses:
FRANK B. MURPHY,
FRANK E. HARTLEY.

l.) 3 Sheets—Sheet 1.

N. TESLA.

SYSTEM OF ELECTRICAL DISTRIBUTION.

0,413. Patented Oct. 2, 1888.

Fig. 1.

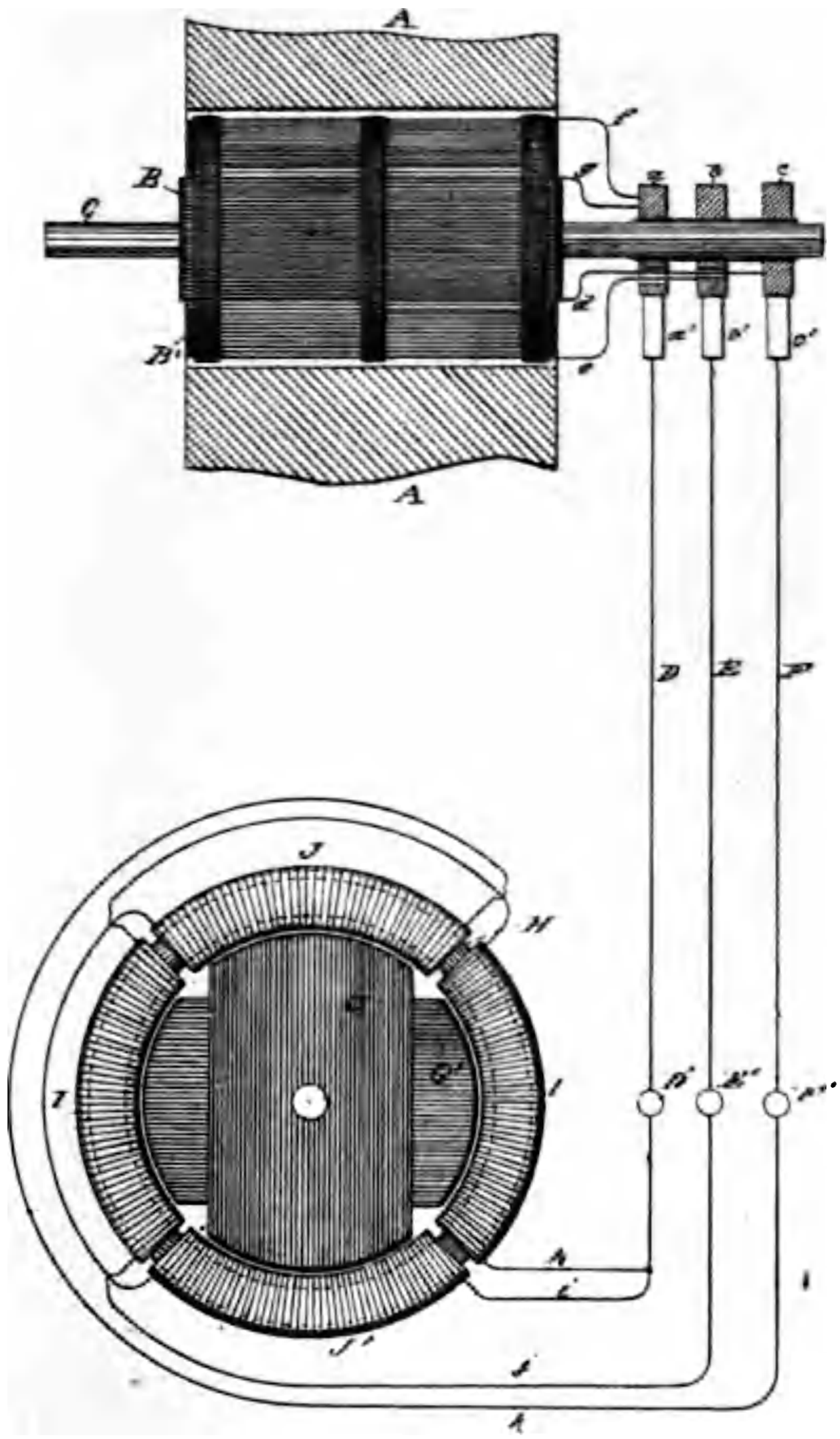

ES:

z Netter

Murlohy.

INVENTOR

Nikola Tesla

BY

Duncan, Curtis & Page

ATTORNEY

(No Model.) 3 Sheets—Sheet 2.

N. TESLA.

SYSTEM OF ELECTRICAL DISTRIBUTION.

No. 390,413. Patented Oct. 2, 1888.

Fig. 2

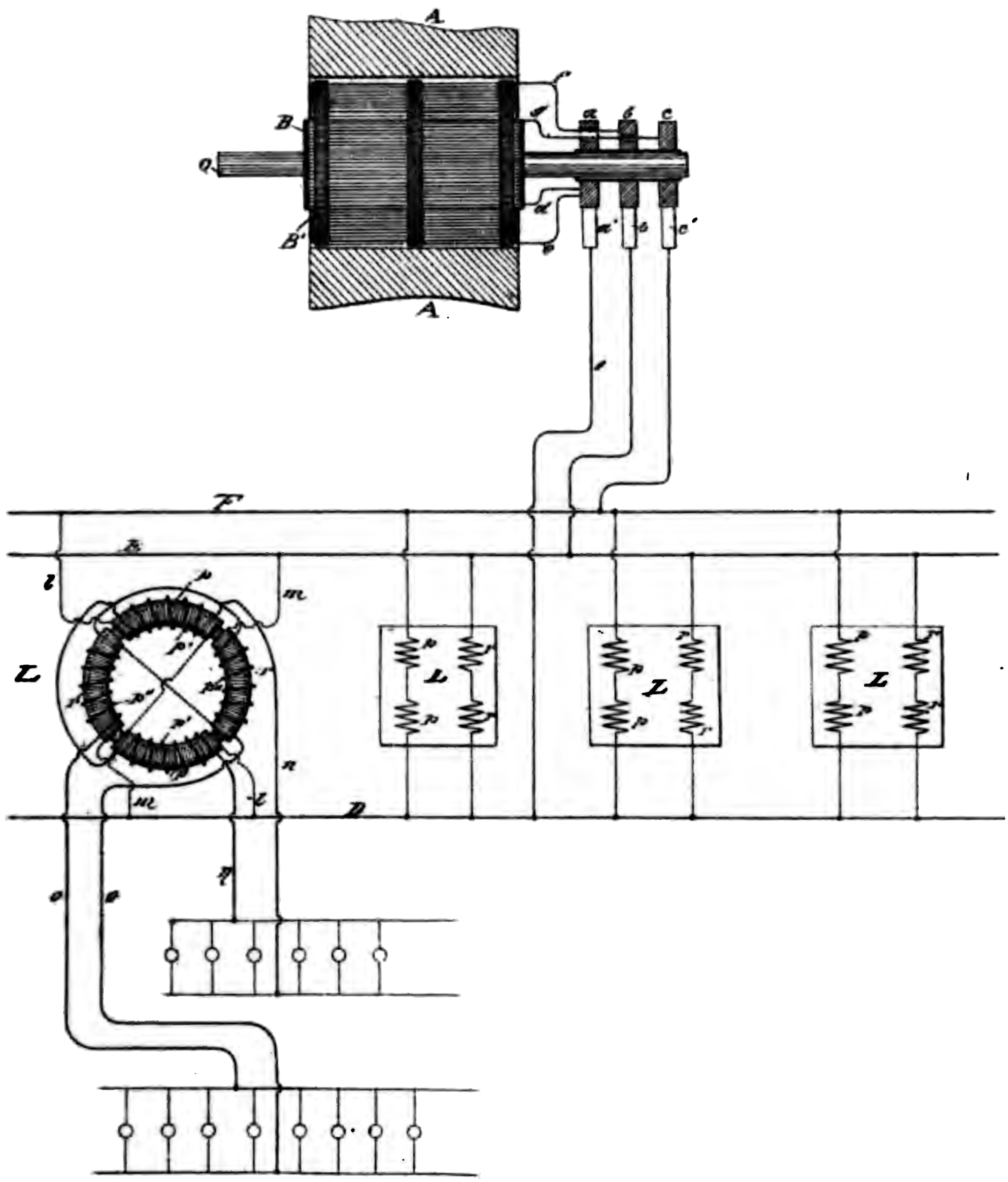

WITNESSES:
Raphael Netter
Frank B. Murray.

INVENTOR
Nikola Tesla.
BY
Duncan, Curtis & Page
ATTORNEYS.

del.) 3 Sheets—Sheet 3.

N. TESLA.

SYSTEM OF ELECTRICAL DISTRIBUTION.

390,413. Patented Oct. 2, 1888.

Fig. 3

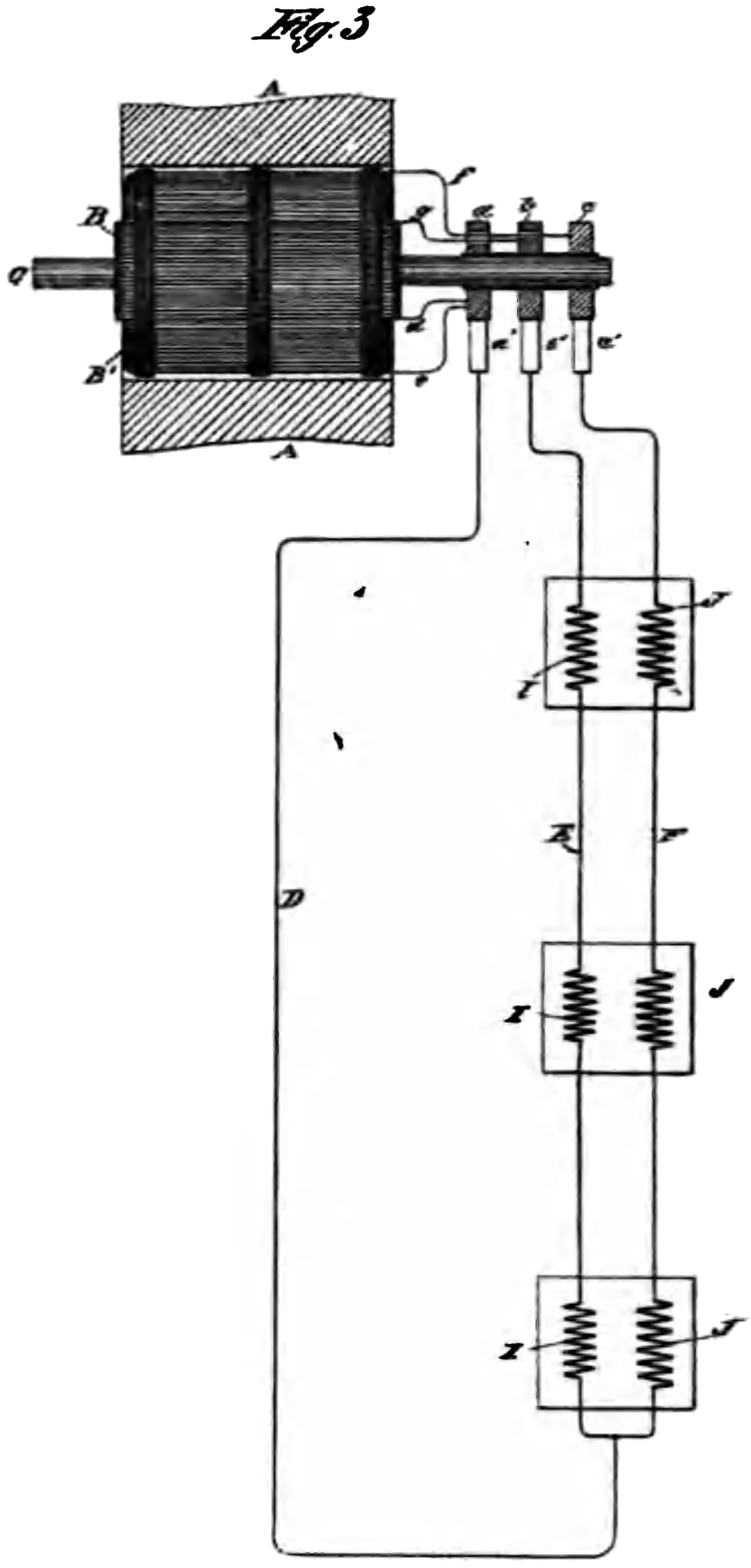

SSES:

Jas. L. Netter
A. Mussolny.

INVENTOR
Nikola Tesla
BY
Duncan, Curtis & Page
ATTORNEYS.

UNITED STATES PATENT OFFICE.

NIKOLA TESLA, OF NEW YORK, N. Y., ASSIGNOR TO THE TESLA ELECTRIC COMPANY, OF SAME PLACE.

SYSTEM OF ELECTRICAL DISTRIBUTION.

SPECIFICATION forming part of Letters Patent No. 390,413, dated October 2, 1888.

Application filed April 10, 1888. Serial No. 270,187. (No model.)

To all whom it may concern:

Be it known that I, NIKOLA TESLA, a subject of the Emperor of Austria, from Smiljan, Lika, border country of Austria-Hungary, residing in the city, county, and State of New York, have invented certain new and useful Improvements in Systems of Electrical Distribution, of which the following is a specification, reference being had to the drawings accompanying and forming a part of the same.

In previous applications for patents made by me I have shown and described electrical systems for the transmission of power and the conversion and distribution of electrical energy, in which the motors and the transformers contain two or more coils or sets of coils, which were connected up in independent circuits with corresponding coils of an alternating-current generator, the operation of the system being brought about by the co-operation of the alternating currents in the independent circuits in progressively moving or shifting the poles or points of maximum magnetic effect of the motors or converters. In these systems, as I have described them, two independent conductors were employed for each of the independent circuits connecting the generator with the devices for converting the transmitted currents into mechanical energy or into electric currents of another character; but I have found that this is not always necessary, and that the two or more circuits may have a single return path or wire in common, with a loss, if any, which is so extremely slight that it may be disregarded entirely. For sake of illustration, if the generator have two independent coils and the motor two coils or two sets of coils in corresponding relations to its operative elements one terminal of each generator-coil is connected to the corresponding terminals of the motor coils through two independent conductors, while the opposite terminals of the respective coils are both connected to one return-wire.

This invention is applicable to my system in various ways, as will be seen by reference to the drawings, in which—

Figure 1 is a diagrammatic illustration of a generator and single motor constructed and electrically connected in accordance with the invention. Fig. 2 is a diagram of the system as it is used in operating motors or converters, or both, in parallel or multiple arc. Fig. 3 illustrates diagrammatically the manner of operating two or more motors or converters, or both, in series.

It is obvious that for purposes of this invention motors or transformers, which may be all designated as "converters," are the same, and that either or both may be operated by the same system or arrangement of circuits.

Referring to Fig. 1, A A designate the poles of the field-magnets of an alternating-current generator, the armature of which, being in this case cylindrical in form and mounted on a shaft, C, is wound longitudinally with coils B B′. The shaft C carries three insulated contact-rings, *a b c*, to two of which, as *b c*, one terminal of each coil, as *e d*, is connected. The remaining terminals, *f g*, are both connected to the third ring, *a*.

A motor in this case is shown as composed of a ring, H, wound with four coils, I I J J, electrically connected, so as to co-operate in pairs, with a tendency to fix the poles of the ring at four points ninety degrees apart. Within the magnetic ring H is a disk or cylindrical core wound with two coils, G G′, which may be connected to form two closed circuits. The terminals *j k* of the two sets or pairs of coils are connected, respectively, to the binding-posts E′ F′, and the other terminals, *h i*, are connected to a single binding-post, D′. To operate the motor, three line-wires are used to connect the terminals of the generator with those of the motor.

So far as the apparent action or mode of operation of this arrangement is concerned, the single wire D, which is, so to speak, a common return-wire for both circuits, may be regarded as two independent wires. In illustration, with the order of connection shown, coil B′ of the generator is producing its maximum current and coil B its minimum; hence the current which passes through wire *e*, ring *b*, brush *b′*, line-wire E, terminal E′, wire *j*, coils I I, wire or terminal D′, line-wire D, brush *a′*, ring *a*, and wire *f*, fixes the polar line of the motor midway between the two coils I I; but as the coil B′ moves from the po-

sition indicated it generates less current, while coil B, moving into the field, generates more. The current from coil B passes through the devices and wires designated by the letters *d*, *c*, *c'*, F, F', *k*, J J, *i*, D', D, *a'*, *a*, and *g*, and the position of the poles of the motor will be due to the resultant effect of the currents in the two sets of coils—that is, it will be advanced in proportion to the advance or forward movement of the armature-coils. The movement of the generator-armature through one quarter of a revolution will obviously bring coil B' into its neutral position and coil B into its position of maximum effect, and this shifts the poles ninety degrees, as they are fixed solely by coils B. This action is repeated for each quarter of a complete revolution.

When more than one motor or other device is employed, they may be run either in parallel or series. In Fig. 2 the former arrangement is shown. The electrical device is shown as a converter, L, constructed as I have described in my application Serial No. 258,787, filed December 23, 1887. The two sets of primary coils *p r* are connected, respectively, to the mains F E, which are electrically connected with the two coils of the generator. The cross-circuit wires *l m*, making these connections, are then connected to the common return-wire D. The secondary coils *p' p''* are in circuits *n o*, including, for example, incandescent lamps. Only one converter is shown entire in this figure, the others being illustrated diagrammatically.

When motors or converters are to be run in series, the two wires E F are led from the generator to the coils of the first motor or converter, then continued on to the next, and so on through the whole series, and are then joined to the single wire D, which completes both circuits through the generator. This is shown in Fig. 3, in which J I represent the two coils or sets of coils of the motors.

Obviously it is immaterial to the operation of the motor or equivalent device in Fig. 1 what order of connections is observed between the respective terminals of the generator or motor.

I have described the invention in its best and most practicable form of which I am aware; but there are other conditions under which it may be carried out. For example, in case the motor and generator each has three independent circuits, one terminal of each circuit is connected to a line-wire and the other three terminals to a common return-conductor. This arrangement will secure similar results to those attained with a generator and motor having but two independent circuits, as above described.

When applied to such machines and motors as have three or more induced circuits with a common electrical joint, the three or more terminals of the generator would be simply connected to those of the motor. Such forms of machines, when adapted in this manner to my system, I have, however, found to be less efficient than the others.

The invention is applicable to machines and motors of various types, and according to circumstances and conditions readily understood, with more or less efficient results. I do not therefore limit myself to any of the details of construction of the apparatus herein shown.

What I claim is—

1. The combination, with a generator having independent current-generating circuits and a converter or converters having independent and corresponding circuits, of independent conductors connecting one terminal of each generator-circuit with a corresponding terminal of the motor and a single conductor connecting the remaining generator and converter terminals, as set forth.

2. The combination, with a generator having independent current-generating circuits and a converter or converters having independent and corresponding circuits, of independent line or connecting circuits formed in part through a conductor common to all, as set forth.

3. The system of electrical distribution herein set forth, consisting of the combination, with an alternating-current generator having independent generating-circuits and electro-magnetic motors or converters provided with corresponding energizing-circuits, of line wires or conductors connecting the coils of the motors or converters, respectively, in series with one terminal of each circuit of the generator, and a single return wire or conductor connecting the said conductors with the other terminals of the generator, as set forth.

NIKOLA TESLA.

Witnesses:
ROBT. F. GAYLORD,
FRANK E. HARTLEY.

(No Model.) 2 Sheets—Sheet 1.

N. TESLA.

DYNAMO ELECTRIC MACHINE.

No. 390,414. Patented Oct. 2, 1888.

Fig. 1

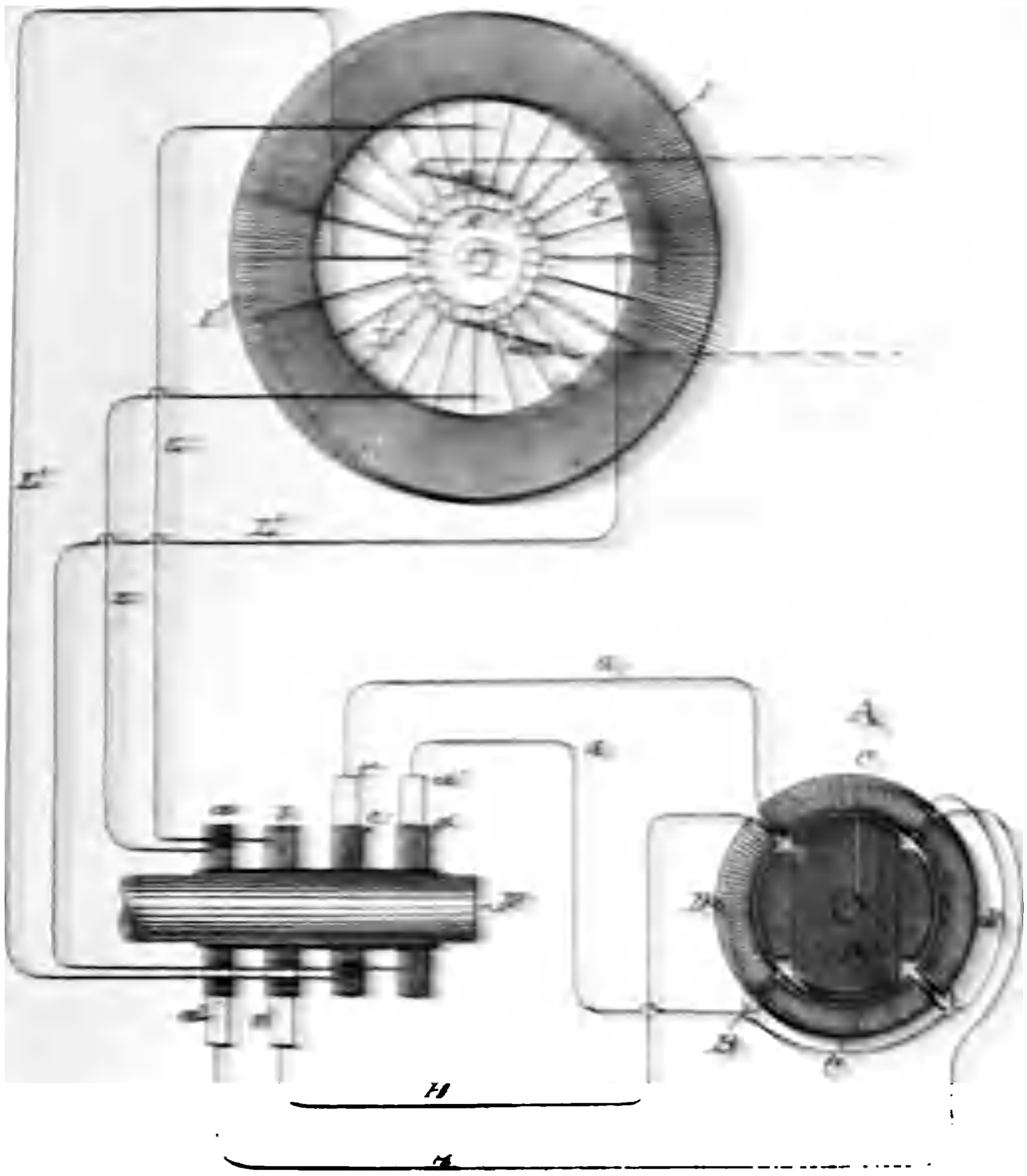

WITNESSES.

Joseph Sutter

Louis Harvey

INVENTOR

Nikola Tesla

BY

Duncan Curtis & Page

ATTORNEYS

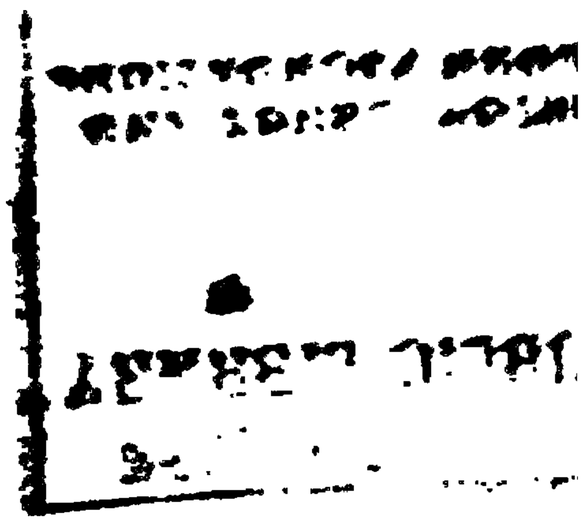

(No Model.) 2 Sheets—Sheet 2.

N. TESLA.

DYNAMO ELECTRIC MACHINE.

No. 390,414. Patented Oct. 2, 1888.

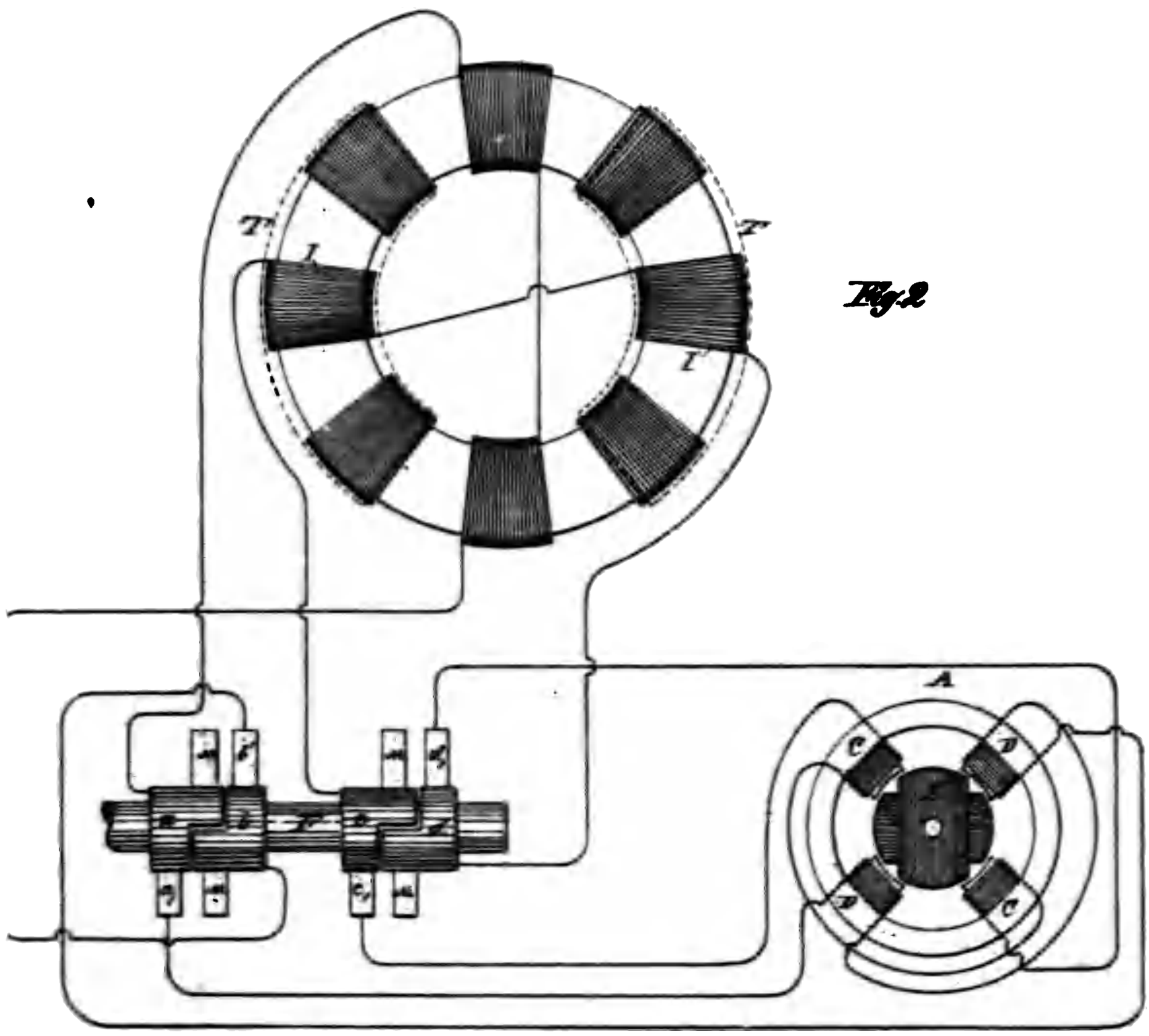

Fig. 2

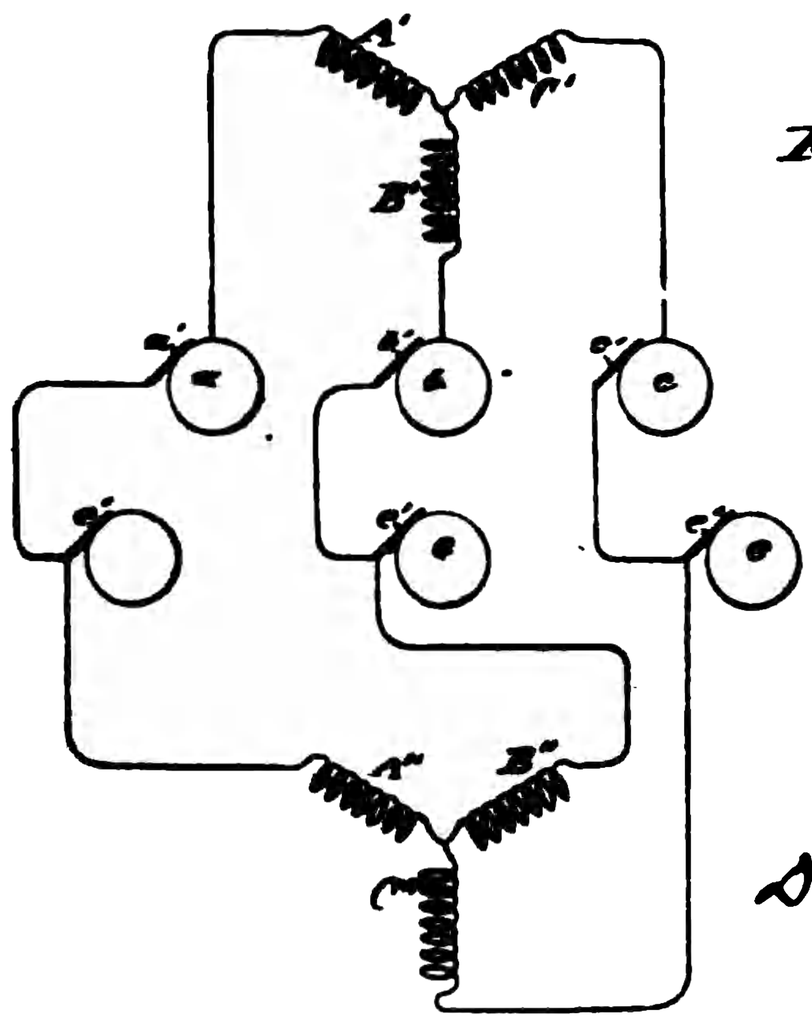

Fig. 3

WITNESSES:
Joseph Nettor
Chas. R. Hartley

INVENTOR
Nikola Tesla
BY
Duncan, Curtis & Page,
ATTORNEYS.

UNITED STATES PATENT OFFICE.

NIKOLA TESLA, OF NEW YORK, N. Y., ASSIGNOR TO THE TESLA ELECTRIC COMPANY, OF SAME PLACE.

DYNAMO-ELECTRIC MACHINE.

SPECIFICATION forming part of Letters Patent No. 390,414, dated October 2, 1888.

Application filed April 23, 1888. Serial No. 271,626. (No model.)

To all whom it may concern:

Be it known that I, NIKOLA TESLA, a subject of the Emperor of Austria, from Smiljan, Lika, border country of Austria-Hungary, now residing at New York, in the county and State of New York, have invented certain new and useful Improvements in Dynamo-Electric Machines, of which the following is a specification, reference being had to the drawings accompanying and forming a part of the same.

In certain patents granted to Charles F. Peck and myself—notably in Patents No. 381,968 and No. 382,280, May 1, 1888—I have shown and described a plan of constructing and operating motors, transformers, and the like, by alternating currents conveyed through two or more independent circuits from a generator having such relation to the motors or transformers as to produce therein a progressive movement of the magnetic poles or lines of force. In the said applications the descriptions and illustrations of the generators were confined to those types of alternating current machine in which the current-generating coils are independent or separate; but I have found that the ordinary forms of continuous-current dynamos now in use may be readily and cheaply adapted to my system, or utilized both as continuous and alternating current generators with but slight changes in their construction. The mode of effecting this forms the substance of my present application.

Generally stated, the plan pursued by me in carrying out this invention is as follows: On the shaft of a given generator, either in place of or in addition to the regular commutator, I secure as many pairs of insulated collecting-rings as there are circuits to be formed. Now, it will be understood that in the operation of any dynamo electric generator the currents in the coils in their movement through the field of force undergo different phases—that is to say, at different positions of the coils the currents have certain directions and certain strengths—and that in my improved motors or transformers it is necessary that the currents in the energizing-coils should undergo a certain order of variations in strength and direction. Hence, the further step—viz, the connection between the induced or generating coils of the machine and the contact-rings from which the currents are to be taken off—will be determined solely by what order of variations of strength and direction in the currents is desired for producing a given result in the electrical translating device. This may be accomplished in various ways; but in the drawings I have given typical instances only of the best and most practicable ways of applying the invention to three of the best-known types of machines, in order to illustrate the principle and to enable any one skilled in the art to apply the invention in any other case or under any modified conditions which the circumstances of particular cases may require.

Figure 1 is a diagram illustrative of the mode of applying the invention to the well-known type of closed or continuous circuit machines. Fig. 2 is a similar diagram containing an armature with separate coils connected diametrically, or what is generally called an "open-circuit" machine. Fig. 3 is a diagram showing the application of the invention to a machine the armature-coils of which have a common joint.

Referring to Fig. 1, let A represent one of my improved motors or transformers, which, for convenience, I shall designate a "converter," which consists of an annular core, B, wound with four independent coils, C and D, those diametrically opposite being connected together so as to co operate in pairs in establishing free poles in the ring, the tendency of each pair being to fix the poles at ninety degrees from the other. There may be an armature, E, within the ring, which is wound with coils closed upon themselves. The object is to pass through coils C D currents of such relative strength and direction as to produce a progressive shifting or movement of the points of maximum magnetic effect around the ring, and to thereby maintain a rotary movement of the armature. I therefore secure to the shaft F of the generator four insulated contact-rings, *a b c d*, upon which I cause to bear the collecting-brushes *a′ b′ c′ d′*, connected by wires G G H H, respectively, with the terminals of coils C and D.

Assume, for sake of illustration, that the coils D D are to receive the maximum and coils C C at the same instant the minimum current, so that the polar line may be midway

between the coils D D, the rings *a b* would therefore be connected to the continuous armature-coil at its neutral points with respect to the field or the point corresponding with that of the ordinary commutator-brushes, and between which exists the greatest difference of potential, while rings *c d* would be connected to two points in the coil, between which exists no difference of potential. The best results will be obtained by making these connections at points equidistant from one another, as shown. These connections are easiest made by using wires L between the rings and the loops or wires J, connecting the coil I to the segments of the commutator K. When the converters are made in this manner, it is evident that the phases of the currents in the sections of the generator-coil will be reproduced in the converter coils. For example, after turning through an arc of ninety degrees the conductors L I_4, which before conveyed the maximum current, will receive the minimum current by reason of the change in the position of their coils, and it is evident that for the same reason the current in said coils has gradually fallen from the maximum to the minimum in passing through the arc of ninety degrees. In this special plan of connections the rotation of the magnetic poles of the converter will be synchronous with that of the armature-coils of the generator, and the result will be the same, whether the energizing circuits are derivations from a continuous armature-coil or from independent coils, as in my previous devices.

I have shown in Fig. 1, in dotted lines, the brushes M M in their proper normal position. In practice these brushes may be removed from the commutator and the field of the generator excited by an external source of current; or the brushes may be allowed to remain on the commutator and to take off a converted current to excite the field, or to be used for other purposes.

In a certain well-known class of machines the armature contains a number of coils the terminals of which connect to commutator-segments, the coils being connected across the armature in pairs. This type of machine is represented in Fig. 2. In this machine each pair of coils goes through the same phases as the coils in some of the generators I have shown, and it is obviously only necessary to utilize them in pairs or sets to operate one of my converters by extending the segments of the commutators belonging to each pair of coils and causing a collecting-brush to bear on the continuous portion of each segment. In this way two or more circuits may be taken off from the generator, each including one or more pairs or sets of coils, as may be desired.

In Fig. 2 I I represent the armature-coils, T T the poles of the field-magnet, and F the shaft carrying the commutators, which are extended to form continuous portions *a b c d*. The brushes bearing on the continuous portions for taking off the alternating currents are represented by *a′ b′ c′ d′*. The collecting-brushes, or those which may be used to take off the direct current, are designated by M M. Two pairs of the armature-coils and their commutators are shown in the figure as being utilized; but all may be utilized in a similar manner.

There is another well-known type of machine in which three or more coils, A′ B′ C′, on the armature have a common joint, the free ends being connected to the segments of a commutator. This form of generator is illustrated in Fig. 3. In this case each terminal of the generator is connected directly or in derivation to a continuous ring, *a b c*, and collecting-brushes *a′ b′ c′*, bearing thereon, take off the alternating currents that operate the motor. It is preferable in this case to employ a motor or transformer with three energizing-coils, A″ B″ C″, placed symmetrically with those of the generator, and the circuits from the latter are connected to the terminals of such coils either directly—as when they are stationary—or by means of brushes *c′* and contact-rings *e*. In this, as in the other cases, the ordinary commutator may be used on the generator, and the current taken from it utilized for exciting the generator field-magnets or for other purposes.

These examples serve to illustrate the principle of the invention. It will be observed that in any case it is necessary only to add the continuous contact or collecting rings and to establish the connections between them and the appropriate coils.

It will be understood that this invention is applicable to other types of machine—as, for example, those by which the induced coils are stationary and the brushes and magnet revolve; but the manner of its application is obvious to one skilled in the art.

Having now described my invention, what I claim is—

1. The combination, with a converter having independent energizing-coils, of a continuous or direct current dynamo or magneto machine, and intermediate circuits permanently connected at suitable points to the induced or generating coils of the generator, as herein set forth.

2. The combination, with a converter provided with independent energizing-circuits, of a continuous or direct current generator provided with continuous collecting-rings connected in derivation to the armature-coils to form the terminals of circuits corresponding to those of the converter, as herein set forth.

NIKOLA TESLA.

Witnesses:
ROBT. F. GAYLORD,
FRANK B. MURPHY.

(No Model.)

N. TESLA.

DYNAMO ELECTRIC MACHINE.

No. 390,721. Patented Oct. 9, 1888.

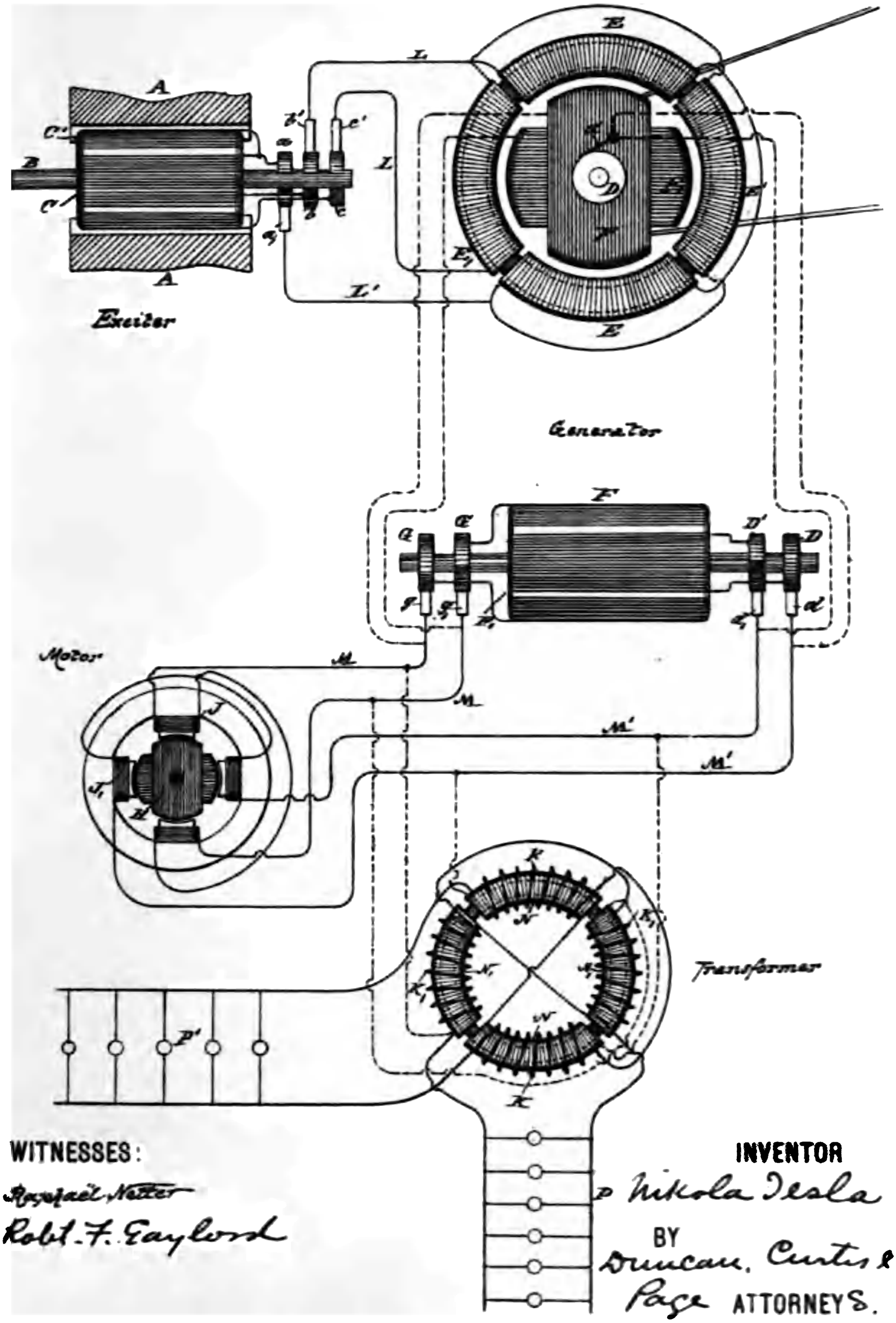

WITNESSES:

Raphael Netter

Robt. F. Gaylord

INVENTOR

Nikola Tesla

BY

Duncan, Curtis & Page ATTORNEYS.

UNITED STATES PATENT OFFICE.

NIKOLA TESLA, OF NEW YORK, N. Y., ASSIGNOR TO THE TESLA ELECTRIC COMPANY, OF SAME PLACE.

DYNAMO-ELECTRIC MACHINE.

SPECIFICATION forming part of Letters Patent No. 390,721, dated October 9, 1888.

Application filed April 28, 1888. Serial No. 272,153. (No model.)

To all whom it may concern:

Be it known that I, NIKOLA TESLA, a subject of the Emperor of Austria, from Smiljan, Lika, border country of Austria-Hungary, now residing at New York, in the county and State of New York, have invented certain new and useful Improvements in Electric Generators, of which the following is a specification, reference being had to the drawing accompanying and forming a part of the same.

My present invention relates, chiefly, to the alternating-current system invented by me and described in prior patents, notably Nos. 381,968 and 382,280, of May 1, 1888, in which the motors or transformers, or generally the converters, are operated by a progressive shifting or movement of their magnetic poles produced by the co-operative action of independent magnetizing-coils through which pass alternating currents in proper order and direction. In my said system, as I have heretofore shown, I employed a generator of alternating currents in which there were independent induced or generating coils corresponding to the energizing-coils of the converter, and the relations of the generator and converters were generally such that the speed of rotation of the magnetic poles of the converter equaled that of the armature of the generator.

To secure the greatest efficiency, it is necessary to run the machines at a high speed, and this is true not only of those generators and motors which are particularly adapted for use in my system, but of others. The practicability of running at very high speeds, however, particularly in the case of large generators, is limited by mechanical conditions, in seeking to avoid which I have devised various plans for operating the system under efficient conditions, although running the generator at a comparatively low rate of speed.

My present invention consists of another way of accomplishing this result, which in certain respects presents many advantages. According to the invention, in lieu of driving the armature of the generator at a high rate of speed, I produce a rotation of the magnetic poles of one element of the generator and drive the other at a different speed, by which similar results are obtained to those secured by a rapid rotation of one of the elements.

I shall describe this invention by reference to the diagram drawing hereto annexed.

The generator which supplies the current for operating the motors or transformers consists in this instance of a subdivided ring or annular core wound with four diametrically-opposite coils, E E′. Within the ring is mounted a cylindrical armature-core wound longitudinally with two independent coils, F F′, the ends of which lead, respectively, to two pairs of insulated contact or collecting rings, D D′ G G′, on the armature-shaft. Collecting-brushes *d d′ g g′* bear upon these rings, respectively, and convey the currents through the two independent line circuits M M′. In the main line there may be included one or more motors or transformers, or both. If motors be used, they are constructed in accordance with my invention with independent coils or sets of coils J J′, included, respectively, in the circuits M M′. These energizing-coils are wound on a ring or annular field or on pole pieces thereon, and produce by the action of the alternating currents passing through them a progressive shifting of the magnetism from pole to pole. The cylindrical armature H of the motor is wound with two coils at right angles, which form independent closed circuits.

If transformers be employed, I connect one set of the primary coils, as N N, wound on a ring or annular core, to one circuit, as M′, and the other primary coils, N′ N′, to the circuit M. The secondary coils K K′ may then be utilized for running groups of incandescent lamps P P′.

With the generator I employ an exciter. This consists of two poles, A A, of steel permanently magnetized, or of iron excited by a battery or other generator of continuous currents, and a cylindrical armature-core mounted on a shaft, B, and wound with two longitudinal coils, C C′. One end of each of these coils is connected to the collecting-rings *b c*, respectively, while the other ends are both connected to a ring, *a*. Collecting-brushes *b′ c′* bear on the rings *b c*, respectively, and conductors L L convey the currents therefrom through the coils E and E′ of the generator. L′ is a common return-wire to brush *a′*. Two independent circuits are thus formed, one including coils C of the exciter and E E of the generator,

the other coils C′ of the exciter and E′ E′ of the generator. It results from this that the operation of the exciter produces a progressive movement of the magnetic poles of the annular field-core of the generator, the shifting or rotary movement of said poles being synchronous with the rotation of the exciter-armature. Considering the operative conditions of a system thus established, it will be found that when the exciter is driven so as to energize the field of the generator the armature of the latter, if left free to turn, would rotate at a speed practically the same as that of the exciter. If under such conditions the coils F F′ of the generator-armature be closed upon themselves or short-circuited, no currents, at least theoretically, will be generated in the said armature-coils. In practice I have observed the presence of slight currents, the existence of which is attributable to more or less pronounced fluctuations in the intensity of the magnetic poles of the generator ring. So, if the armature-coils F F′ be closed through the motor, the latter will not be turned as long as the movement of the generator-armature is synchronous with that of the exciter or of the magnetic poles of its field. If, on the contrary, the speed of the generator-armature be in any way checked, so that the shifting or rotation of the poles of the field becomes relatively more rapid, currents will be induced in the armature-coils. This obviously follows from the passing of the lines of force across the armature-conductors. The greater the speed of rotation of the magnetic poles relatively to that of the armature the more rapidly the currents developed in the coils of the latter will follow one another, and the more rapidly the motor will revolve in response thereto, and this continues until the armature-generator is stopped entirely, as by a brake, when the motor, if properly constructed, runs at the same speed with which the magnetic poles of the generator rotate.

The effective strength of the currents developed in the armature-coils of the generator is dependent upon the strength of the currents energizing the generator and upon the number of rotations per unit of time of the magnetic poles of the generator; hence the speed of the motor-armature will depend in all cases upon the relative speeds of the armature of the generator and of its magnetic poles. For example, if the poles are turned two thousand times per unit of time and the armature is turned eight hundred, the motor will turn twelve hundred times, or nearly so. Very slight differences of speed may be indicated by a delicately-balanced motor.

Let it now be assumed that power is applied to the generator-armature to turn it in a direction opposite to that in which its magnetic poles rotate. In such case the result would be similar to that produced by a generator the armature and field-magnets of which are rotated in opposite directions, and by reason of these conditions the motor-armature will turn at a rate of speed equal to the sum of the speeds of the armature and magnetic poles of the generator, so that a comparatively low speed of the generator-armature will produce a high speed in the motor.

It will be observed in connection with this system that on diminishing the resistance of the external circuit of the generator-armature by checking the speed of the motor or by adding translating devices in multiple arc in the secondary circuit or circuits of the transformer the strength of the current in the armature-circuit is greatly increased. This is due to two causes: first, to the great differences in the speeds of the motor and generator, and, secondly, to the fact that the apparatus follows the analogy of a transformer, for, in proportion as the resistance of the armature or secondary circuits is reduced, the strength of the currents in the field or primary circuits of the generator is increased and the currents in the armature augmented correspondingly. For similar reasons the currents in the armature-coils of the generator increase very rapidly when the speed of the armature is reduced when running in the same direction as the magnetic poles or conversely.

It will be understood from the above description that the generator-armature may be run in the direction of the shifting of the magnetic poles, but more rapidly, and that in such case the speed of the motor will be equal to the difference between the two rates.

In many applications to electrical conversion and distribution this system possesses great advantages both in economy, efficiency, and practicability.

What I claim is—

1. The combination, with an alternating current generator having independent energizing or field and independent induced or armature coils, of an alternating-current exciter having generating or induced coils corresponding to and connected with the energizing-coils of the generator, as set forth.

2. In an alternating-current generator, the combination of the elements named and cooperatively associated in the following manner: a field-magnet wound with independent coils each connected with a source of alternating currents, whereby the magnetic poles produced by said coils will be progressively shifted or moved through the field, and an armature-core wound with independent coils, each having terminals from which currents are delivered to the independent external circuits.

3. The system of electrical distribution consisting of the combination, with an alternating-current generator having independent energizing-coils and an armature wound with independent induced coils, of an alternating-current exciter having induced coils corresponding to and connected with the energizing-coils of the generator, and one or more electrical converters having independent inducing or energizing coils connected with the corre-

ırmature coils of the generator, as 'orth.

mbination, with an alternating-cur- ıtor having a field-magnet wound ɔendent energizing-coils and an ıdapted to be rotated within the ced by said magnet, of an exciter having induced or generating coils corresponding to and connected with the energizing-coils of the generator, as set forth.

NIKOLA TESLA.

Witnesses:

ROBT. F. GAYLORD,

PARKER W. PAGE.

l.) 2 Sheets—Sheet 1.

N. TESLA.

REGULATOR FOR ALTERNATE CURRENT MOTORS.

0,820. Patented Oct. 9, 1888.

Fig. 2

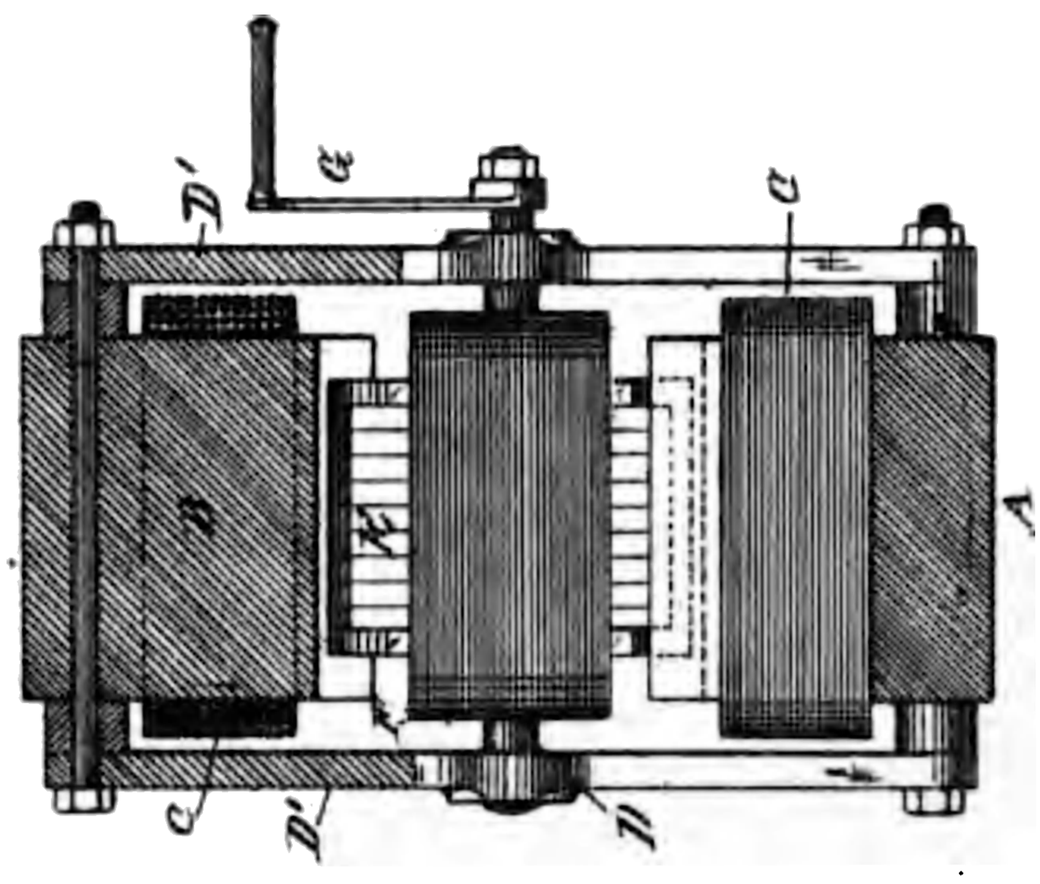

Fig. 1

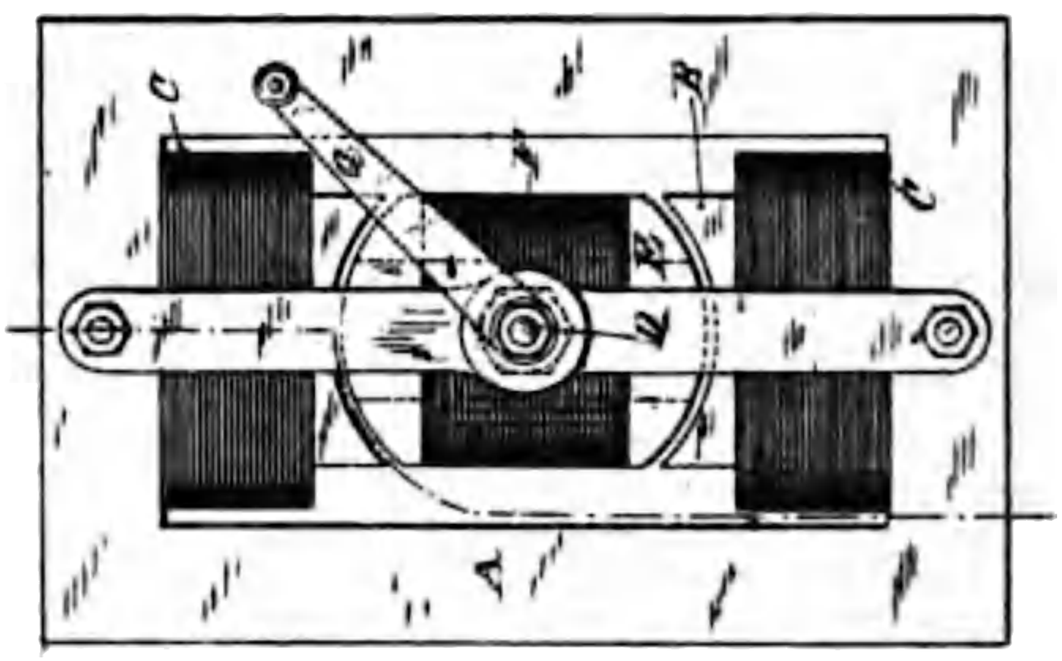

ES:
. Nesser.
E. Gaylord.

INVENTOR.
Nikola Tesla
BY
Duncan, Curtis & Page.
ATTORNEYS.

(No Model.) 2 Sheets—Sheet 2.

N. TESLA.

REGULATOR FOR ALTERNATE CURRENT MOTORS.

No. 390,820. Patented Oct. 9, 1888.

Fig. 3

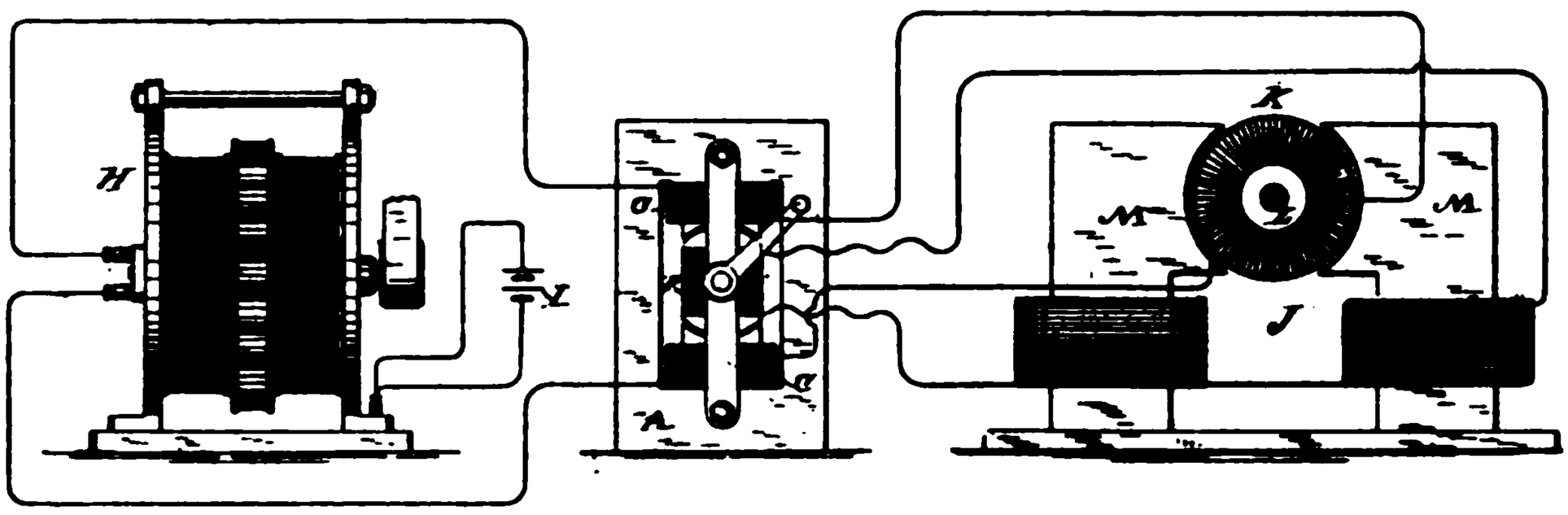

Fig. 4

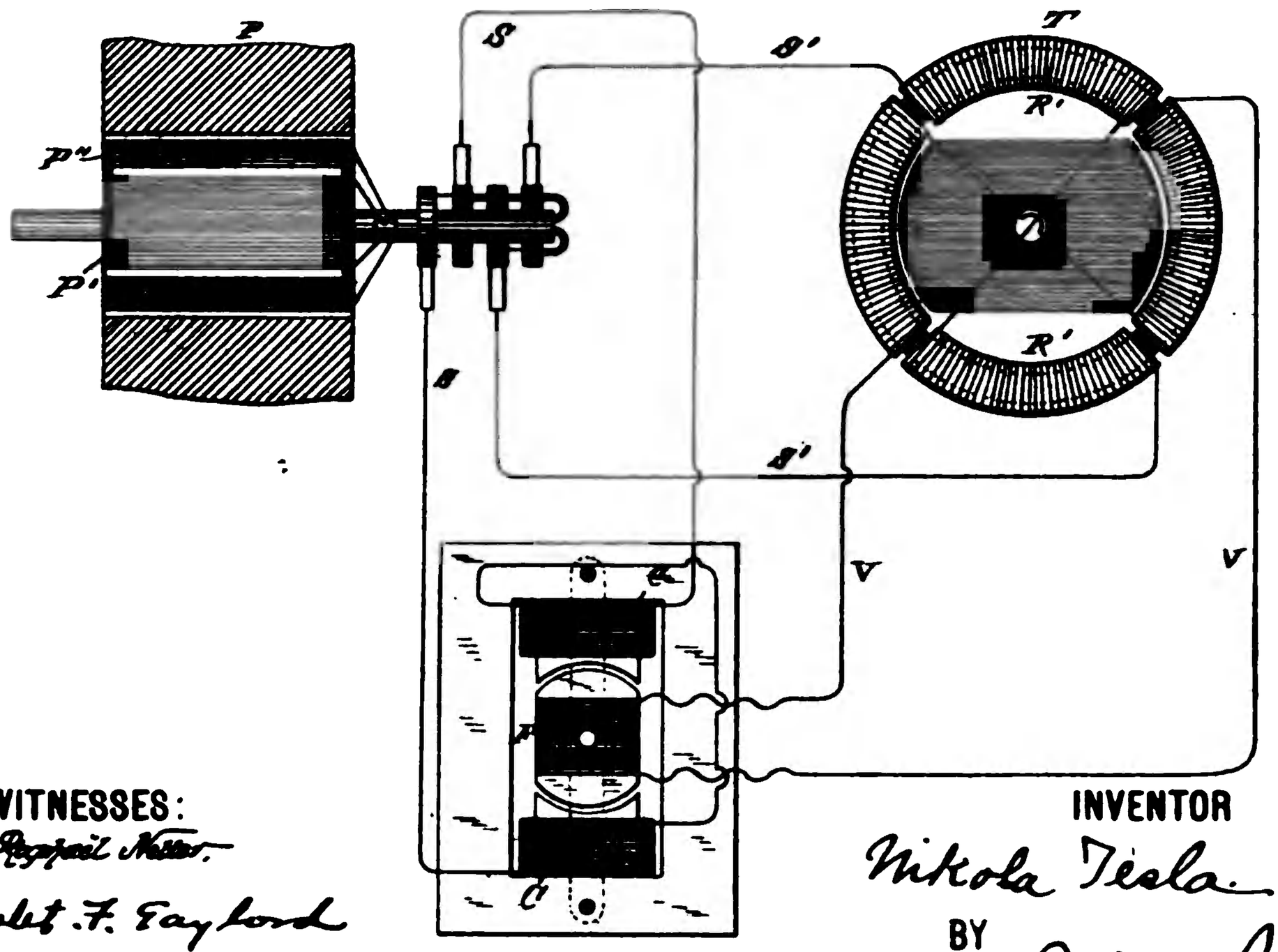

WITNESSES:
Reginald Netter.
Robt. F. Gaylord

INVENTOR
Nikola Tesla.
BY
Duncan, Curtis & Page.
ATTORNEYS.

UNITED STATES PATENT OFFICE.

NIKOLA TESLA, OF NEW YORK, N. Y., ASSIGNOR TO THE TESLA ELECTRIC COMPANY, OF SAME PLACE.

REGULATOR FOR ALTERNATE-CURRENT MOTORS.

SPECIFICATIONS forming part of Letters Patent No. [illegible], dated October 9, 1888.

Application filed April 25, 1888. Serial No. [illegible]. (Specimens.)

To all whom it may concern:

Be it known that I, NIKOLA TESLA, a subject of the Emperor of Austria, from Smiljan, Lika, border country of Austria-Hungary, now residing in New York, in the county and State of New York, have invented certain new and useful Improvements in Regulators for Alternating-Current Motors, of which the following is a specification, reference being had to the drawings accompanying and forming part of the same.

My invention is an improvement in systems for the electric transmission of power; and it consists in a means of regulating the speed and power of the motor or motors. The system for use with which the invention is more particularly designed is one in which the motors, or what may be in certain cases their equivalents—the electrical transformers—have two or more independent energizing-circuits, which, receiving current from corresponding sources, act to set up a progressive movement or shifting of the magnetic poles of the motors; but the invention is also applicable to other purposes, as will hereinafter appear. I employ the regulator for the purpose of varying the speed of these motors.

The regulator proper consists of a form of converter or transformer with one element capable of movement with respect to the other, whereby the inductive relations may be altered, either manually or automatically, for the purpose of varying the strength of the induced current. I prefer to construct this device in such manner that the induced or secondary element may be movable with respect to the other; and the improvement, so far as relates merely to the construction of the device itself, consists, essentially, in the combination, with two opposite magnetic poles, of an armature wound with an insulated coil and mounted on a shaft, whereby it may be turned to the desired extent within the field produced by the poles. The normal position of the core of the secondary element is that in which it most completely closes the magnetic circuit between the poles of the primary element, and in this position its coil is in its most effective position for the inductive action upon it of the primary coils; but by turning the movable core to either side the induced currents delivered by its coil become weaker until, by a movement of the said core and coil through ninety degrees, there will be no current delivered.

The construction of this device, broadly, I do not claim as of my invention; but this, together with the manner of applying and using the same, which forms the subject of my invention, I will now explain by reference to the accompanying drawings.

Figure 1 is a view in side elevation of the regulator. Fig. 2 is a broken section on line *x x* of Fig. 1. Fig. 3 is a diagram illustrating the preferred manner of applying the regulator to ordinary forms of motors, and Fig. 4 is a similar diagram illustrating the application of the device to my improved alternating-current motors.

The regulator may be constructed in many ways to secure the desired result; but in the best form of which I am now aware it is shown in Figs. 1 and 2.

A represents a frame of iron, and I would here state that the plan which is now invariably followed of dividing up all iron cores which are subjected to the influence of alternating currents should be adopted in the construction of this device.

B B are the cores of the inducing or primary coils C C, said cores being integral with or bolted to the frame A in any well-known way.

D is a shaft mounted in the side bars, D', and on which is secured a sectional iron core, E, wound with an induced or secondary coil, F, the convolutions of which are parallel with the axis of the shaft. The ends of the core are rounded off, so as to fit closely in the space between the two poles and permit the core E to be turned. A handle, G, secured to the projecting end of the shaft D, is provided for this purpose.

Any means may be employed for maintaining the core and secondary coil in any given position to which it is turned by the handle.

The operation or effect of the device will be understood by reference to the diagrams illustrating the manner of its application.

In Fig. 3, let H represent an ordinary alternating-current generator, the field-magnets of which are excited by a suitable source of current, I. Let J designate an ordinary form of

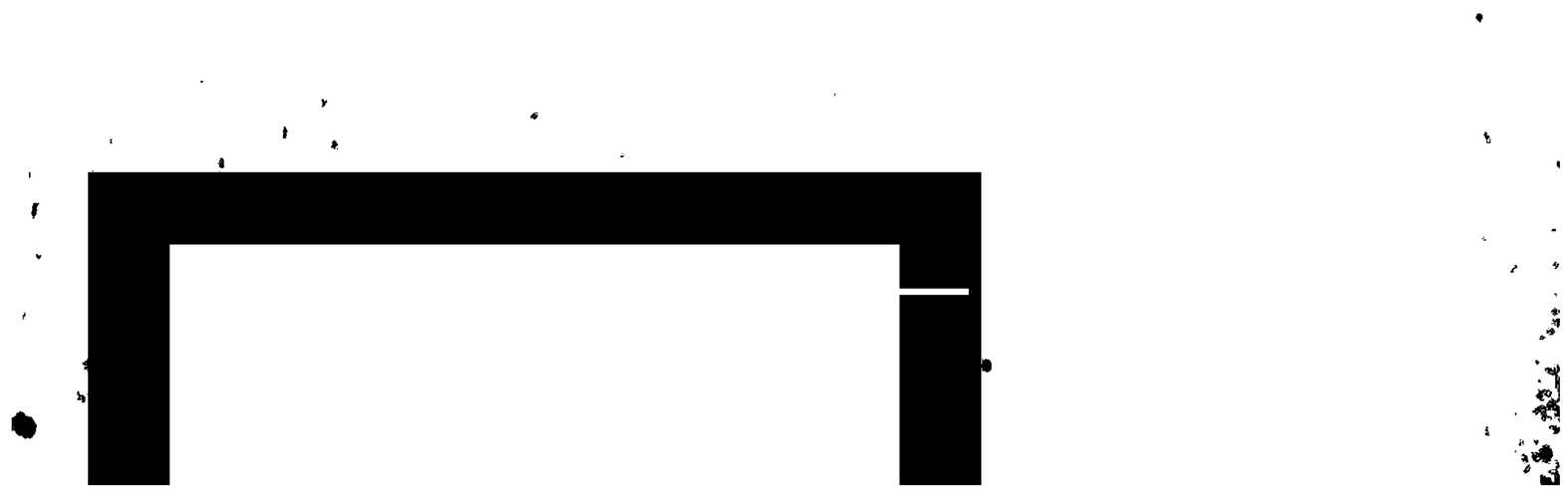

electro-magnetic motor provided with an armature, K, commutator L, and field-magnets M. It is well known that such a motor, if its field-magnets' cores be divided up into insulated sections, may be practically operated by an alternating current; but in using my regulator with such a motor I include one element of the motor only—say the armature-coils—in the main circuit of the generator, making the connections through the brushes and the commutator in the usual way. I also include one of the elements of the regulator—say the stationary coils—in the same circuit, and in the circuit with the secondary or movable coil of the regulator I connect up the field-coils of the motor. I prefer to use flexible conductors to make the connections from the secondary coil of the regulator, as I thereby avoid the use of sliding contacts or rings without interfering with the requisite movement of the core E.

If the regulator be in its normal position, or that in which its magnetic circuit is most nearly closed, it delivers its maximum induced current, the phases of which so correspond with those of the primary current that the motor will run as though both field and armature were excited by the main current.

To vary the speed of the motor to any rate between the minimum and maximum rates, the core E and coils F are turned in either direction to an extent which produces the desired result, for in its normal position the convolutions of coil F embrace the maximum number of lines of force, all of which act with the same effect upon said coil; hence it will deliver its maximum current; but by turning the coil F out of its position of maximum effect the number of lines of force embraced by it is diminished. The inductive effect is therefore impaired, and the current delivered by coil F will continue to diminish in proportion to the angle at which the coil F is turned until, after passing through an angle of ninety degrees, the convolutions of the coil will be at right angles to those of coils C C, and the inductive effect reduced to a minimum.

Incidentally to certain constructions, other causes may influence the variation in the strength of the induced currents. For example, in the present case it will be observed that by the first movement of coil F a certain portion of its convolutions are carried beyond the line of the direct influence of the lines of force, and that the magnetic path or circuit for said lines is impaired; hence the inductive effect would be reduced. Next, that after moving through a certain angle, which is obviously determined by the relative dimensions of the bobbin or coil F, diagonally-opposite portions of the coil will be simultaneously included in the field, but in such positions that the lines which produce a current-impulse in one portion of the coil in a certain direction will produce in the diagonally-opposite portion a corresponding impulse in the opposite direction; hence portions of the current will neutralize one another.

As before stated, the mechanical construction of the device may be greatly varied; but the essential conditions of the invention will be fulfilled in any apparatus in which the movement of the elements with respect to one another effects the same results by varying the inductive relations of the two elements in a manner similar to that described.

It may also be stated that the core E is not indispensable to the operation of the regulator; but its presence is obviously beneficial. This regulator, however, has another valuable property in its capability of reversing the motor, for if the coil F be turned through a half-revolution the position of its convolutions relatively to the two coils C C and the lines of force is reversed, and consequently the phases of the current will be reversed. This will produce a rotation of the motor in an opposite direction. This form of regulator is also applied with great advantage to my system of utilizing alternating currents, in which the magnetic poles of the field of a motor are progressively shifted by means of the combined effects upon the field of magnetizing-coils included in independent circuits, through which pass alternating currents in proper order and relations to each other.

In illustration, let P represent one of my generators having two independent coils, P′ and P″, on the armature, and T a diagram of a motor having two independent energizing-coils or sets of coils, R R′. One of the circuits from the generator, as S′ S′, includes one set, R′ R′, of the energizing-coils of the motor, while the other circuit, as S S, includes the primary coils of the regulator. The secondary coil of the regulator includes the other coils, R R, of the motor.

While the secondary coil of the regulator is in its normal position it produces its maximum current, and the maximum rotary effect is imparted to the motor; but this effect will be diminished in proportion to the angle at which the coil F of the regulator is turned. The motor will also be reversed by reversing the position of the coil with reference to the coils C C, and thereby reversing the phases of the current produced by the generator. This changes the direction of the movement of the shifting poles which the armature follows.

One of the main advantages of this plan of regulation is its economy of power. When the induced coil is generating its maximum current, the maximum amount of energy in the primary coils is absorbed; but as the induced coil is turned from its normal position the self-induction of the primary coils reduces the expenditure of energy and saves power.

It is obvious that in practice either coils C C or coil F may be used as primary or secondary, and it is well understood that their rela-

tive proportions may be varied to produce any desired difference or similarity in the inducing and induced currents.

I am aware that it is not new to vary the secondary current of an induction-coil by moving one coil with respect to the other, and thereby varying the inductive relations normally existing between the two. This I do not claim.

What I claim is—

1. The combination, with a motor having independent energizing-circuits, of an alternating-current regulator, consisting, essentially, of inducing and induced coils movable with respect to one another, whereby the strength of the induced currents may be varied, the induced coils being included in and adapted to supply the current for one of the motor-circuits, as set forth.

2. The combination, with a motor adapted to be run or operated by alternating currents and provided with independent energizing-coils, of a regulator consisting of stationary inducing-coils and an induced coil capable of being rotated, whereby it may be turned to a greater or less angle to the primary coils, or its position with respect thereto reversed, the induced coil or coils being included in and adapted to supply the current for one of the motor-circuits, as set forth.

NIKOLA TESLA.

Witnesses:
ROBT. F. GAYLORD,
FRANK B. MURPHY.

tive proportions may be varied to produce any desired difference or similarity in the inducing and induced currents.

I am aware that it is not new to vary the secondary current of an induction-coil by moving one coil with respect to the other, and thereby varying the inductive relations normally existing between the two. This I do not claim.

What I claim is—

1. The combination, with a motor having independent energizing-circuits, of an alternating-current regulator, consisting, essentially, of inducing and induced coils movable with respect to one another, whereby the strength of the induced currents may be varied, the induced coils being included in and adapted to supply the current for one of the motor-circuits, as set forth.

2. The combination, with a motor adapted to be run or operated by alternating currents and provided with independent energizing-coils, of a regulator consisting of stationary inducing-coils and an induced coil capable of being rotated, whereby it may be turned to a greater or less angle to the primary coils, or its position with respect thereto reversed, the induced coil or coils being included in and adapted to supply the current for one of the motor-circuits, as set forth.

NIKOLA TESLA.

Witnesses:
ROBT. F. GAYLORD,
FRANK B. MURPHY.

UNITED STATES PATENT OFFICE.

NIKOLA TESLA, OF NEW YORK, N. Y.

METHOD OF OPERATING ELECTRO-MAGNETIC MOTORS.

SPECIFICATION forming part of Letters Patent No. 401,520, dated April 16, 1889.
Application filed February 18, 1889. Serial No. 300,230. (No model.)

To all whom it may concern:

Be it known that I, NIKOLA TESLA, a subject of the Emperor of Austria, from Smiljan, Lika, border country of Austria-Hungary, and residing at New York, in the county and State of New York, have invented certain new and useful Improvements in Methods of Operating Electro-Magnetic Motors, of which the following is a specification, reference being had to the drawings accompanying and forming a part of the same.

As is well known, certain forms of alternating-current machines have the property, when connected in circuit with an alternating-current generator, of running as a motor in synchronism therewith; but, while the alternating current will run the motor after it has attained a rate of speed synchronous with that of the generator, it will not start it. Hence, in all instances heretofore where these "synchronizing-motors," as they are termed, have been run some means have been adopted to bring the motors up to synchronism with the generator, or approximately so, before the alternating current of the generator is applied to drive them. In some instances mechanical appliances have been utilized for this purpose. In others special and complicated forms of motor have been constructed. I have discovered a much more simple method or plan of operating synchronizing-motors, which requires practically no other apparatus than the motor itself. In other words, by a certain change in the circuit-connections of the motor I convert it at will from a double-circuit motor, or such as I have described in prior patents and applications, and which will start under the action of an alternating current into a synchronizing-motor, or one which will be run by the generator only when it has reached a certain speed of rotation synchronous with that of the generator. In this manner I am enabled to very greatly extend the applications of my system and to secure all the advantages of both forms of alternating-current motor.

The expression "synchronous with that of the generator," is used herein in its ordinary acceptation—that is to say, a motor is said to synchronize with the generator when it preserves a certain relative speed determined by its number of poles and the number of alternations produced per revolution of the generator. Its actual speed, therefore, may be faster or slower than that of the generator; but it is said to be synchronous so long as it preserves the same relative speed.

In carrying out my invention I construct a motor which has a strong tendency to synchronism with the generator. The construction which I prefer for this is that in which the armature is provided with polar projections. The field-magnets are wound with two sets of coils, the terminals of which are connected to a switch mechanism, by means of which the line-current may be carried directly through the said coils or indirectly through paths by which its phases are modified. To start such a motor, the switch is turned onto a set of contacts which includes in one motor-circuit a dead resistance, in the other an inductive resistance, and, the two circuits being in derivation, it is obvious that the difference in phase of the current in such circuits will set up a rotation of the motor. When the speed of the motor has thus been brought to the desired rate, the switch is shifted to throw the main current directly through the motor-circuits, and although the currents in both circuits will now be of the same phase the motor will continue to revolve, becoming a true synchronous motor. To secure greater efficiency, I wind the armature or its polar projections with coils closed on themselves. There are various modifications and important features of this method or plan; but the main principle of the invention will be understood from the foregoing.

In the drawings, to which I now refer, I have illustrated by the diagrams the general features of construction and operation which distinguish my invention, Figure 1 being drawn to illustrate the details of the plan above set forth, and Figs. 2 and 3 modifications of the same.

Referring to Fig. 1, let A designate the field-magnets of a motor, the polar projections of which are wound with coils B C included in independent circuits, and D the armature with polar projections wound with coils E closed upon themselves, the motor in these respects being similar in construction to those described in my patent, No. 382,279, dated May 1, 1888, but having, by reason of the

polar projections on the armature-core or other similar and well-known features, the properties of a synchronizing-motor.

L L′ represent the conductors of a line from an alternating-current generator G.

Near the motor is placed a switch the action of which is that of the one shown in the drawings, which is constructed as follows: F F′ are two conducting plates or arms, pivoted at their ends and connected by an insulating cross-bar, H, so as to be shifted in parallelism. In the path of the bars F F′ is the contact 2, which forms one terminal of the circuit through coils C, and the contact 4, which is one terminal of the circuit through coils B. The opposite end of the wire of coils C is connected to the wire L or bar F′, and the corresponding end of coils B is connected to wire L′ and bar F; hence if the bars be shifted so as to bear on contacts 2 and 4 both sets of coils B C will be included in the circuit L L′ in multiple arc or derivation. In the path of the levers F F′ are two other contact-terminals, 1 and 3. The contact 1 is connected to contact 2 through an artificial resistance, I, and contact 3 with contact 4 through a self-induction coil, J, so that when the switch-levers are shifted onto the points 1 and 3 the circuits of coils B and C will be connected in multiple arc or derivation to the circuit L L′, and will include the resistance and self-induction coil, respectively. A third position of the switch is that in which the levers F and F′ are shifted out of contact with both sets of points. In this case the motor is entirely out of circuit.

The purpose and manner of operating the motor by these devices are as follows: The normal position of the switch, the motor being out of circuit, is off the contact-points. Assuming the generator to be running, and that it is desired to start the motor, the switch is shifted until its levers rest upon points 1 and 3. The two motor-circuits are thus connected with the generator-circuit; but by reason of the presence of the resistance I in one and the self-induction coil J in the other the coincidence of the phases of the current is disturbed sufficiently to produce a progression of the poles, which starts the motor in rotation. When the speed of the motor has run up to synchronism with the generator, or approximately so, the switch is shifted over onto the points 2 and 4, thus cutting out the coils I and J, so that the currents in both circuits have the same phase; but the motor now runs as a synchronous motor, which is well known to be a very desirable and efficient means of converting and transmitting power.

It will be understood that when brought up to speed the motor will run with only one of the circuits B or C connected with the main or generator circuit, or the two circuits may be connected in series. This latter plan is preferable when a current having a high number of alternations per unit of time is employed to drive the motor. In such case the starting of the motor is more difficult and the dead and inductive resistances must take up a considerable proportion of the electro-motive force of the circuits. Generally I so adjust the conditions that the electro-motive force used in each of the motor-circuits is that which is required to operate the motor when its circuits are in series. The plan which I follow in this case is illustrated in Fig. 2. In this diagram the motor has twelve poles and the armature has polar projections D wound with closed coils E. The switch used is of substantially the same construction as that shown in the previous figure. There are, however, five contacts, which I have designated by the figures 5, 6, 7, 8, and 9. The motor-circuits B C, which include alternate field-coils, are connected to the terminals in the following order: One end of circuit C is connected to contact 9 and to contact 5 through a dead resistance, I. One terminal of circuit B is connected to contact 7 and to contact 6 through a self-induction coil, J. The opposite terminals of both circuits are connected to contact 8.

One of the levers, as F, of the switch is made with an extension, *f*, or otherwise, so as to cover both contacts 5 and 6 when shifted into the position to start the motor. It will be observed that when in this position and with lever F′ on contact 8 the current divides between the two circuits B C, which from their difference in electrical character produce a progression of the poles that starts the motor in rotation. When the motor has attained the proper speed, the switch is shifted so that the levers cover the contacts 7 and 9, thereby connecting circuits B and C in series. I have found that by this disposition the motor is maintained in rotation in synchronism with the generator. This principle of operation, which consists in converting by a change of connections or otherwise a double-circuit motor or one operating by a progressive shifting of the poles into an ordinary synchronizing-motor may be carried out in many other ways. For instance, instead of using the switch shown in the previous figures, I may use a temporary ground-circuit between the generator and motor, in order to start the motor, in substantially the manner indicated in Fig. 3. Let G in this figure represent an ordinary alternating-current generator with, say, two poles, M M′, and an armature wound with two coils, N N′, at right angles and connected in series. The motor has, for example, four poles wound with coils B C, which are connected in series and an armature with polar projections D wound with closed coils E E. From the common joint or union between the two circuits of both the generator and the motor an earth-connection is established, while the terminals or ends of the said circuits are connected to the line. Assuming that the motor is a synchronizing-motor or one that has the capability of running in synchronism with the generator, but not of start-

ing, it may be started by the above-described apparatus by closing the ground-connection from both generator and motor. The system thus becomes one with a two-circuit generator and motor, the ground forming a common return for the currents in the two circuits L and L′. When by this arrangement of circuits the motor is brought to speed, the ground-connection is broken between the motor or generator, or both, and ground, switches P P′ being employed for this purpose. The motor then runs as a synchronizing-motor.

In describing those features which constitute my invention I have omitted illustrations of the appliances used in conjunction with the electrical devices of similar systems—such, for instance, as driving-belts, fixed and loose pulleys for the motor, and the like; but these are matters well understood.

In describing my invention by reference to specific constructions I do not wish to be understood as limiting myself to the constructions shown; and in explanation of my intent in this respect I would say that I may in such forms of apparatus as I have shown in Figs. 1 and 2 include the dead resistance and self-induction coil in either circuit, or use only a dead resistance or a self-induction coil, as in the various ways shown in my application, No. 293,052, filed December 8, 1888. I may also use any form of switch, whether manual or automatic, that will by its manipulation or operation effect the required change of connections, and in order to secure the necessary difference of phase in the two motor-circuits on starting I may employ any of the known means for this purpose.

I believe that I am the first to operate electro-magnetic motors by alternating currents in any of the ways herein suggested or described—that is to say, by producing a progressive movement or rotation of their poles or points of greatest magnetic attraction by the alternating currents until they have reached a given speed, and then by the same currents producing a simple alternation of their poles, or, in other words, by a change in the order or character of the circuit-connections to convert a motor operating on one principle to one operating on another, for the purpose described.

I do not claim herein of itself the method of or apparatus for operating a motor which forms a part of this invention and which involves the principle of varying or modifying the currents passing through the energizing-circuits, so as to produce between such currents a difference of phase, as these matters are described and claimed by me in other applications, but with the object of securing, broadly, the method as a whole which I have herein set forth.

What I claim is—

1. The method of operating an alternating-current motor herein described by first progressively shifting or rotating its poles or points of greatest attraction and then, when the motor has attained a given speed, alternating the said poles, as described.

2. The method of operating an electro-magnetic motor herein described, which consists in passing through independent energizing-circuits of the motor alternating currents differing in phase and then, when the motor has attained a given speed, alternating currents coinciding in phase, as described.

3. The method of operating an electro-magnetic motor herein described, which consists in starting the motor by passing alternating currents differing in phase through independent energizing-circuits and then, when the motor has attained a given speed, joining the energizing-circuits in series and passing an alternating current through the same.

4. The method of operating a synchronizing-motor, which consists in passing an alternating current through independent energizing-circuits of the motor and introducing into such circuits a resistance and self-induction coil, whereby a difference of phase between the currents in the circuits will be obtained, and then, when the speed of the motor synchronizes with that of the generator, withdrawing the resistance and self-induction coil, as set forth.

NIKOLA TESLA.

Witnesses:
GEO. M. MONRO,
WM. H. LEMON.

(No Model.)

N. TESLA.

ELECTRO MAGNETIC MOTOR.

No. 405,858. **Patented June 25, 1889.**

Fig. 1

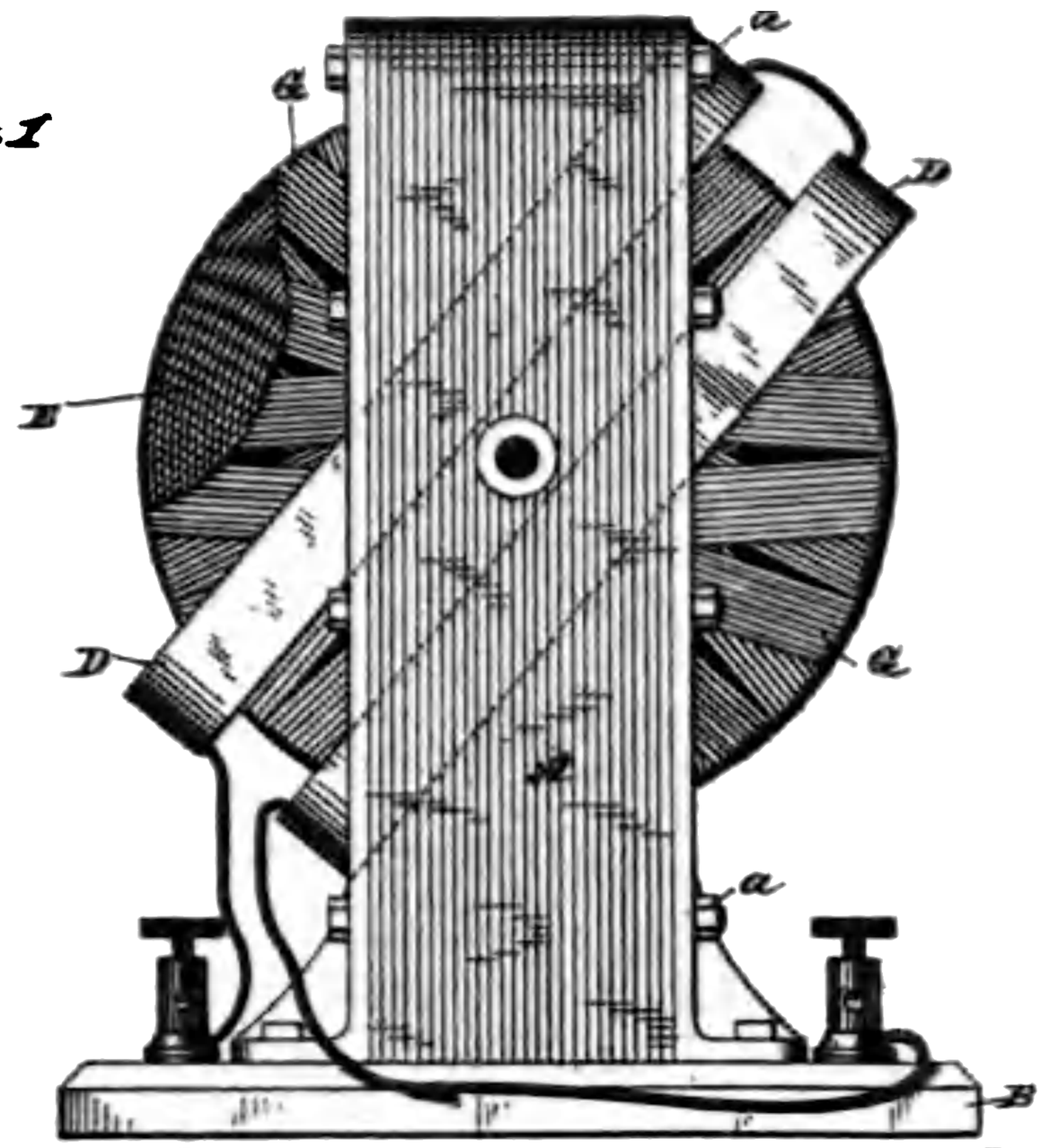

Fig. 2

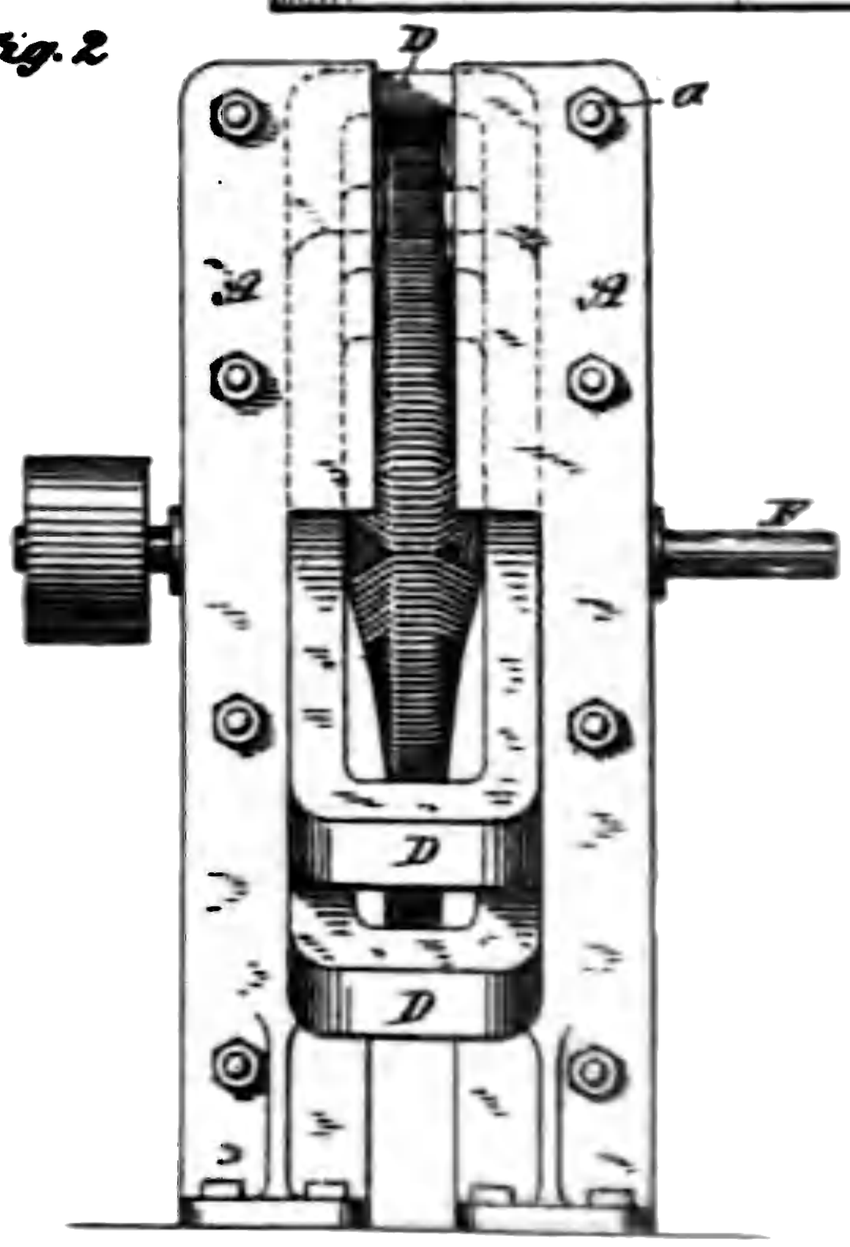

Fig. 3

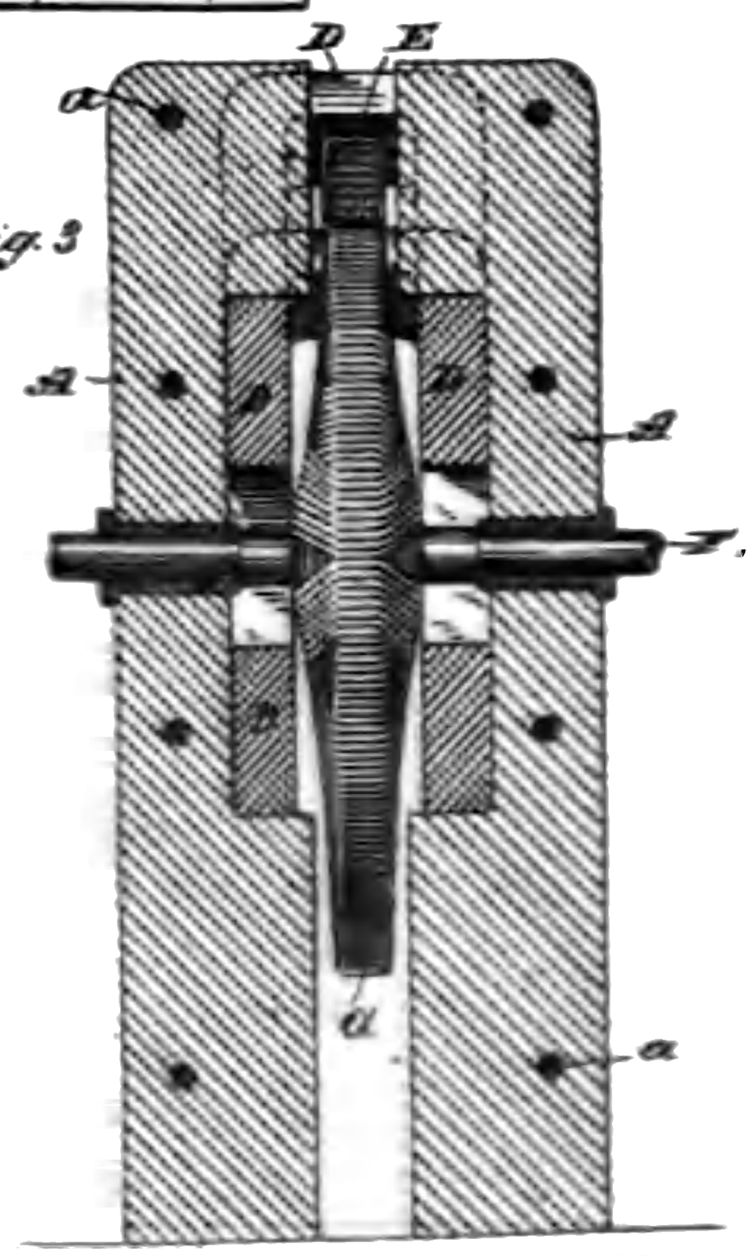

WITNESSES:

Raphael Netter

Robt. F. Gaylord

INVENTOR

Nikola Tesla

BY

Duncan, Curtis & Page

ATTORNEYS

UNITED STATES PATENT OFFICE.

NIKOLA TESLA, OF NEW YORK, N. Y., ASSIGNOR TO THE TESLA ELECTRIC COMPANY, OF SAME PLACE.

ELECTRO-MAGNETIC MOTOR.

SPECIFICATION forming part of Letters Patent No. 405,858, dated June 25, 1889.

Application filed January 8, 1889. Serial No. 295,745. (No model.)

To all whom it may concern:

Be it known that I, NIKOLA TESLA, from Smiljan, Lika, border country of Austria-Hungary, a subject of the Emperor of Austria, residing at New York, in the county and State of New York, have invented certain new and useful Improvements in Electro-Magnetic Motors, of which the following is a specification, reference being had to the drawings accompanying and forming a part of the same.

In order to define more clearly the relations which the motor forming the subject of my present application bears to others of the class to which it pertains, I will recapitulate briefly the forms of alternating-current motors invented by me and described more in detail in my prior patents and applications. Of these there are two principal types or forms: first, those containing two or more energizing-circuits through which are caused to pass alternating currents differing from one another in phase to an extent sufficient to produce a continuous progression or shifting of the poles or points of greatest magnetic effect, in obedience to which the movable element of the motor is maintained in rotation; second, those containing poles or parts of different magnetic susceptibility, which under the energizing influence of the same current or two currents coinciding in phase will exhibit differences in their magnetic periods or phases. In the first class of motors the torque is due to the magnetism established in different portions of the motor by currents from the same or from independent sources, and exhibiting time differences in phase. In the second class the torque results from the energizing effects of a current upon parts of the motor which differ in magnetic susceptibility—in other words, parts which respond to the same relative degree to the action of a current, not simultaneously, but after different intervals of time. In my present invention, however, the torque, instead of being solely the result of a time difference in the magnetic periods or phases of the poles or attractive parts to whatever cause due, is produced by an angular displacement of the parts which, though movable with respect to one another, are magnetized simultaneously, or approximately so, by the same currents. This principle of operation I have embodied practically in a motor in which I obtain the necessary angular displacement between the points of greatest magnetic attraction in the two elements of the motor—the armature and field—by the direction of the lamination of the magnetic cores of said elements, and the best means of accomplishing this result of which I am at present aware I have shown in the accompanying drawings.

Figure 1 is a side view of the motor with a portion of its armature-core exposed. Fig. 2 is an end or edge view of the same. Fig. 3 is a central cross-section of the same, the armature being shown mainly in elevation.

Let A A designate two plates built up of thin sections or laminæ of soft iron insulated more or less from one another and held together by bolts *a* or any other suitable means and secured to a base B. The inner faces of these plates contain recesses or grooves in which a coil or coils D are secured obliquely to the direction of the laminations. Within the coils D is a disk E, preferably composed of a spirally-wound iron wire or ribbon or a series of concentric rings and mounted on a shaft F, having bearings in the plates A A. Such a device when acted upon by an alternating current is capable of rotation and constitutes a motor, the operation of which I explain in the following manner: A current or current-impulse traversing the coils D tends to magnetize the cores A A and E, all of which are within the influence of the magnetic field of the coils. The poles thus established would naturally lie in the same line at right angles to the coils D, but in the plates A they are deflected by reason of the direction of the laminations and appear at or near the extremities of said plates. In the disk, however, where these conditions are not present, the poles or points of greatest attraction are on a line at right angles to the plane of the coils; hence there will be a torque established by this angular displacement of the poles or magnetic lines, which starts the disk in rotation, the magnetic lines of the armature and field tending toward a position of paral-

lelism. This rotation is continued and maintained by the reversals of the current in coils D D, which change alternately the polarity of the field-cores A A. This rotary tendency or effect will be greatly increased by winding the disk with conductors G, closed upon themselves and having a radial direction, whereby the magnetic intensity of the poles of the disk will be greatly increased by the energizing effect of the currents induced in the coils G by the alternating currents in coils D. The plan of winding and the principle of operation have been fully explained in my patent, No. 382,279, of May 1, 1888.

The cores of the disk and field may or may not be of different magnetic susceptibility—that is to say, they may both be of the same kind of iron, so as to be magnetized at approximately the same instant by the coils D; or one may be of soft iron and the other of hard, in order that a certain time may elapse between the periods of their magnetization. In either case rotation will be produced; but unless the disk is provided with the closed energizing-coils it is desirable that the above-described difference of magnetic susceptibility be utilized to assist in its rotation.

The cores of the field and armature may be made in various ways, as will be well understood, it being only requisite that the laminations in each be in such direction as to secure the necessary angular displacement of the points of greatest attraction. Moreover, since the disk may be considered as made up of an infinite number of radial arms, it is obvious that what is true of a disk holds, under well-understood conditions, for many other forms of armature, and my invention in this respect is in no sense limited to the specific form of armature shown.

It will be understood that the specific ways of carrying out this invention are almost without number, and that, therefore, I do not limit myself to the precise form of motor which I have herein shown.

I believe that I am the first to produce rotation of an armature, at least such as could be utilized for any general or practicable purposes, by means of an alternating current passing through a single coil or several coils acting as one, and which have a direct magnetizing effect upon the cores of both armature and field, and this I claim in its broadest sense.

I further believe that I am the first to impart directly, by means of an alternating current, magnetism to the cores of the two elements of a motor, and by the direction of the lamination of one or both of the same to produce an angular displacement of the poles or lines of magnetic force of the cores, respectively.

What I therefore claim is—

1. An electro-magnetic motor consisting of a field-magnet, a rotary armature, and a single coil adapted to be connected to a source of alternating currents and to impart magnetism to both the armature and the field-magnet with angular displacement of the maximum points, as set forth.

2. In an electro-magnetic motor, the combination, with a coil adapted to be connected with a source of alternating currents, of a field-magnet and rotary armature the cores of which are in such relation to the coil as to be energized thereby and subdivided or laminated in such manner as to produce an angular displacement of their poles or the magnetic lines therein, as set forth.

3. In an electro-magnetic motor, the combination, with a coil adapted to be connected with a source of alternating currents, of field-magnets with laminations lying obliquely to the plane of said coil and a circular or disk armature mounted to rotate between the field-magnets, both field and armature being under the magnetizing influence of the coil, as set forth.

4. In an electro-magnetic motor, the combination, with a coil adapted to be connected with a source of alternating currents, of field-magnets with laminations lying obliquely to the plane of the coil and a circular or disk armature with spiral or concentric laminations mounted between the field-magnets, both field and armature being under the magnetizing influence of the coil, as set forth.

5. In an electro-magnetic motor, the combination, with a coil adapted to be connected to a source of alternating currents, of a field-magnet and a rotary armature with closed coils thereon, both the field and the armature being under the magnetizing influence of said coil and laminated to produce an angular displacement of the poles of the two cores.

NIKOLA TESLA.

Witnesses:

EDWARD T. EVANS,

GEORGE N. MONRO.

(No Model.)

N. TESLA.

METHOD OF ELECTRICAL POWER TRANSMISSION.

No. 405,859. Patented June 25, 1889.

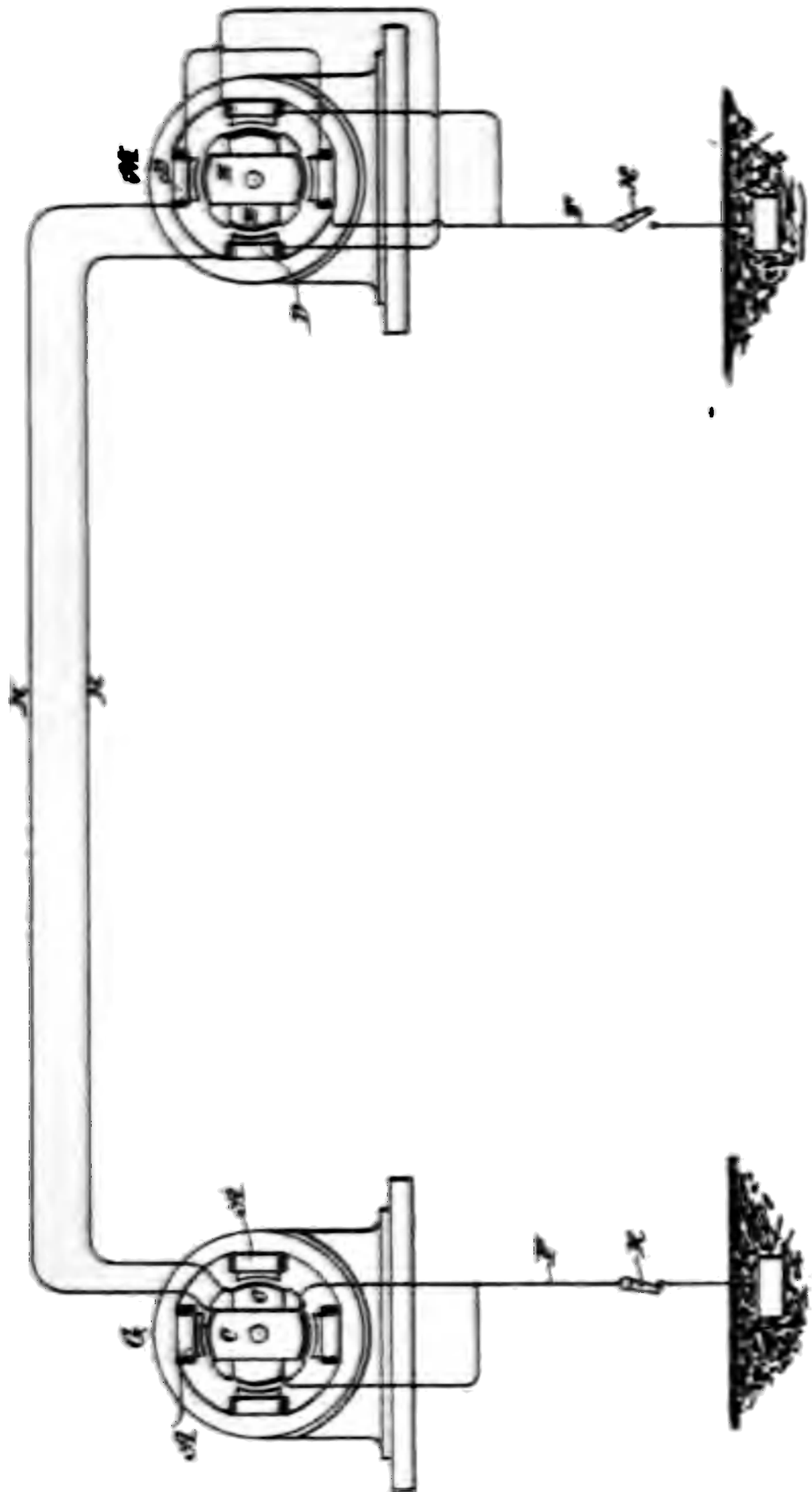

Witnesses:
[illegible]
Robt. F. Gaylord

Inventor
Nikola Tesla
By
Duncan, Curtis & Page.
Attorneys.

(No Model.) 2 Sheets—Sheet 1.

N. TESLA.

ELECTRO MAGNETIC MOTOR.

No. 416,191. Patented Dec. 3, 1889.

Fig. 1

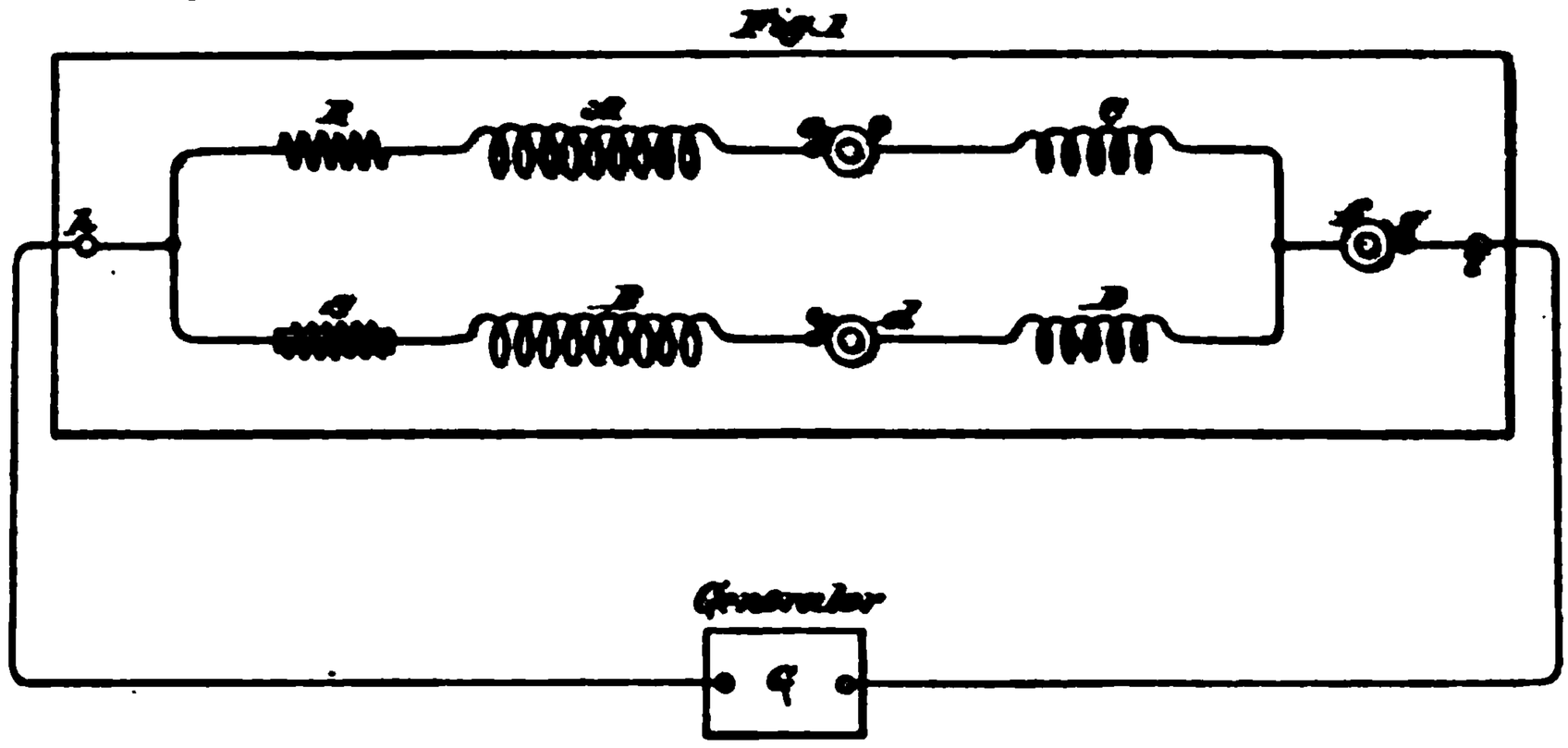

Fig. 2

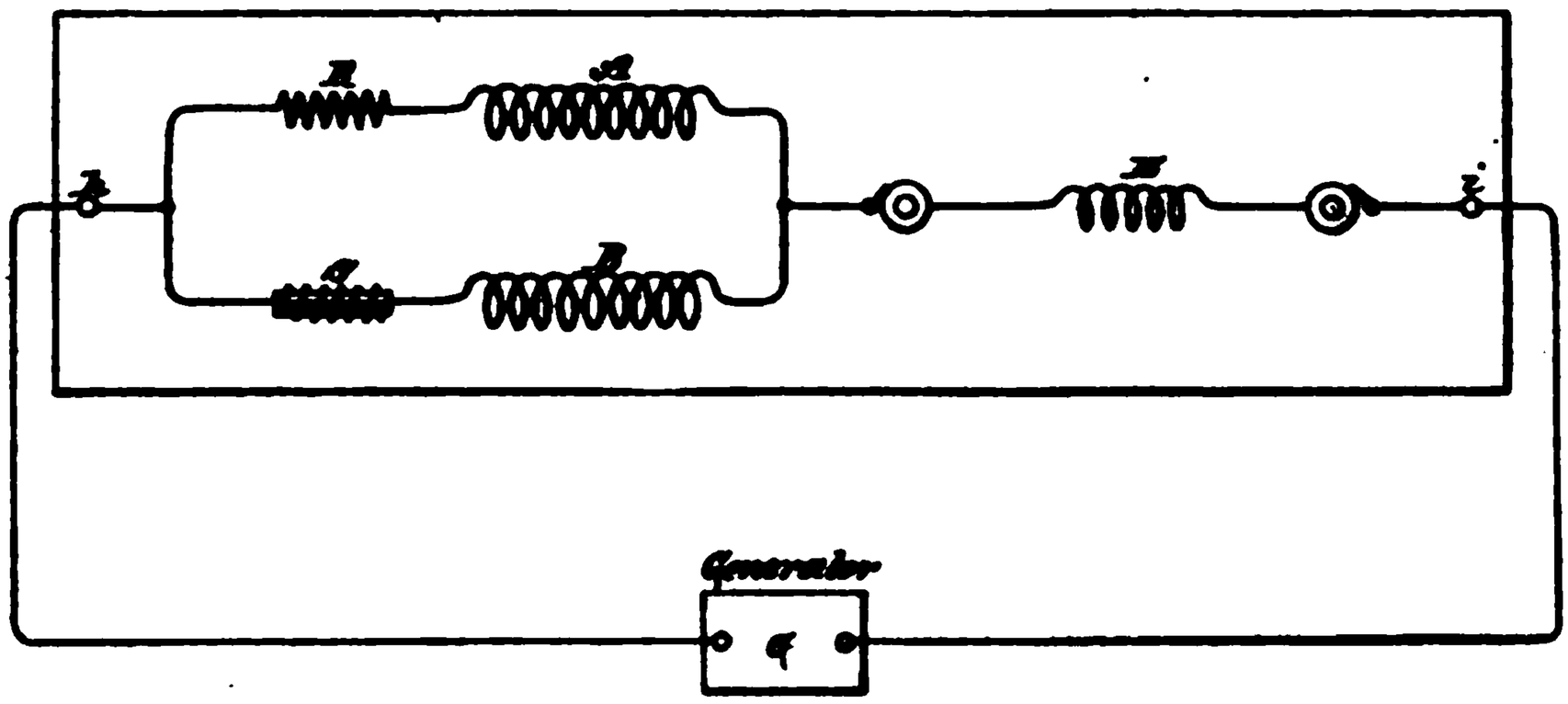

Fig. 3

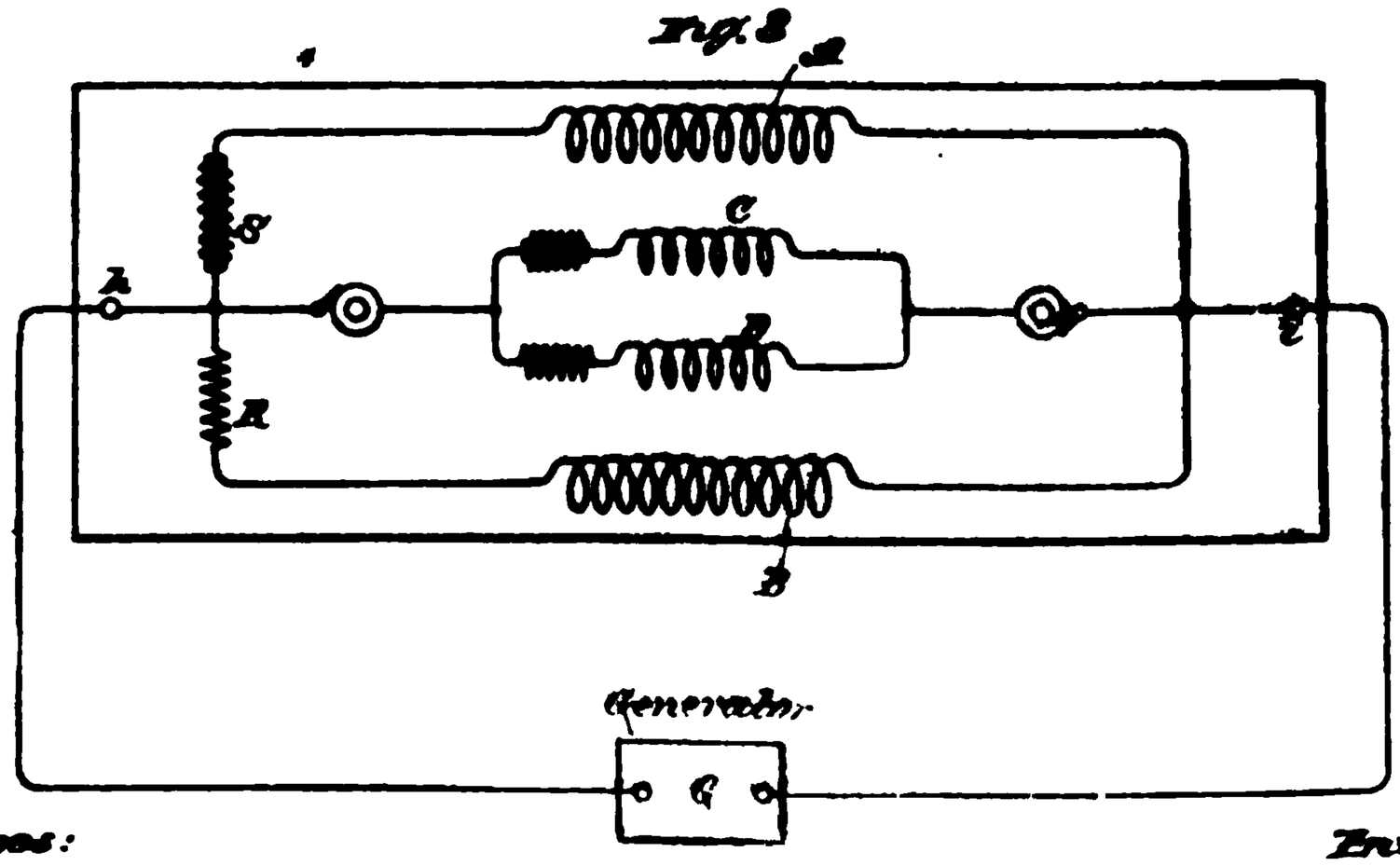

Witnesses:

Raphael Netter

Robt. F. Gaylord

Inventor

Nikola Tesla

By

Duncan, Curtis & Page,

Attorneys

wires H H. When by this arrangement of circuits the motor is brought to speed, the ground-connection is broken between the generator or motor or both and ground, switches K K being employed for this purpose. The motor then runs as a synchronizing motor.

This system is capable of various useful applications which it is not necessary to describe in detail; but it will be enough to say that the convertibility of the system from double circuit to single circuit is a feature in itself of great value and utility.

I do not wish to be understood as confining myself to the precise arrangement or order of connections herein set forth, as these may be obviously varied in many respects.

What I claim is—

1. The method of operating synchronizing motors herein described, which consists in electrically connecting intermediate points of the inducing-circuit of the generator and the energizing-circuit of the motor until the motor has reached a desired speed and then interrupting such connection, as set forth.

2. The method herein described of starting or operating synchronizing motors, which consists in electrically connecting intermediate points of the inducing-circuit of the generator and the energizing-circuit of the motor to earth until the motor has reached the desired speed and then interrupting either or both of the ground-connections, as set forth.

NIKOLA TESLA.

Witnesses:

EDWARD T. EVANS,

E. C. UPSTILL.

(No Model.) 2 Sheets—Sheet 1.

N. TESLA.

ELECTRO MAGNETIC MOTOR.

No. 416,191. Patented Dec. 3, 1889.

Fig. 1

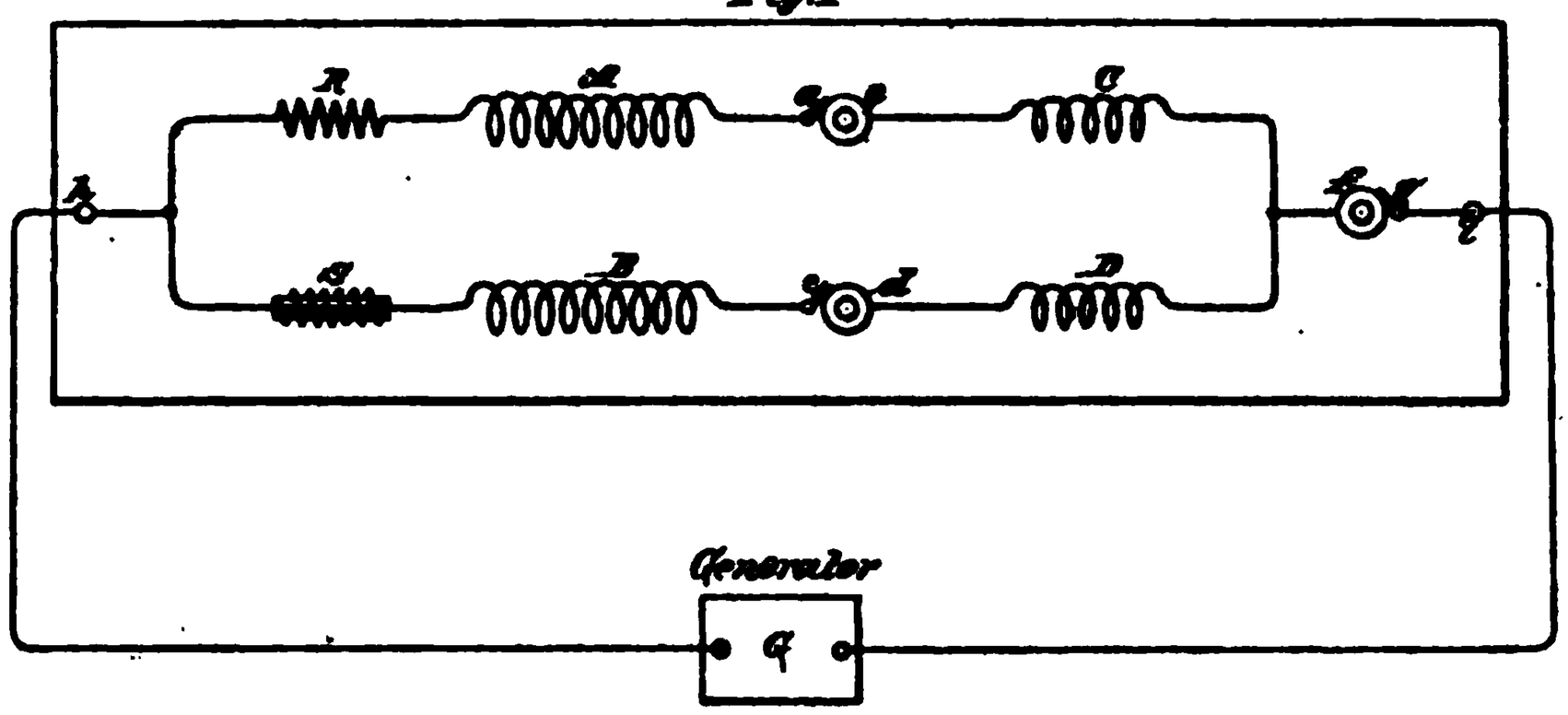

Fig. 2

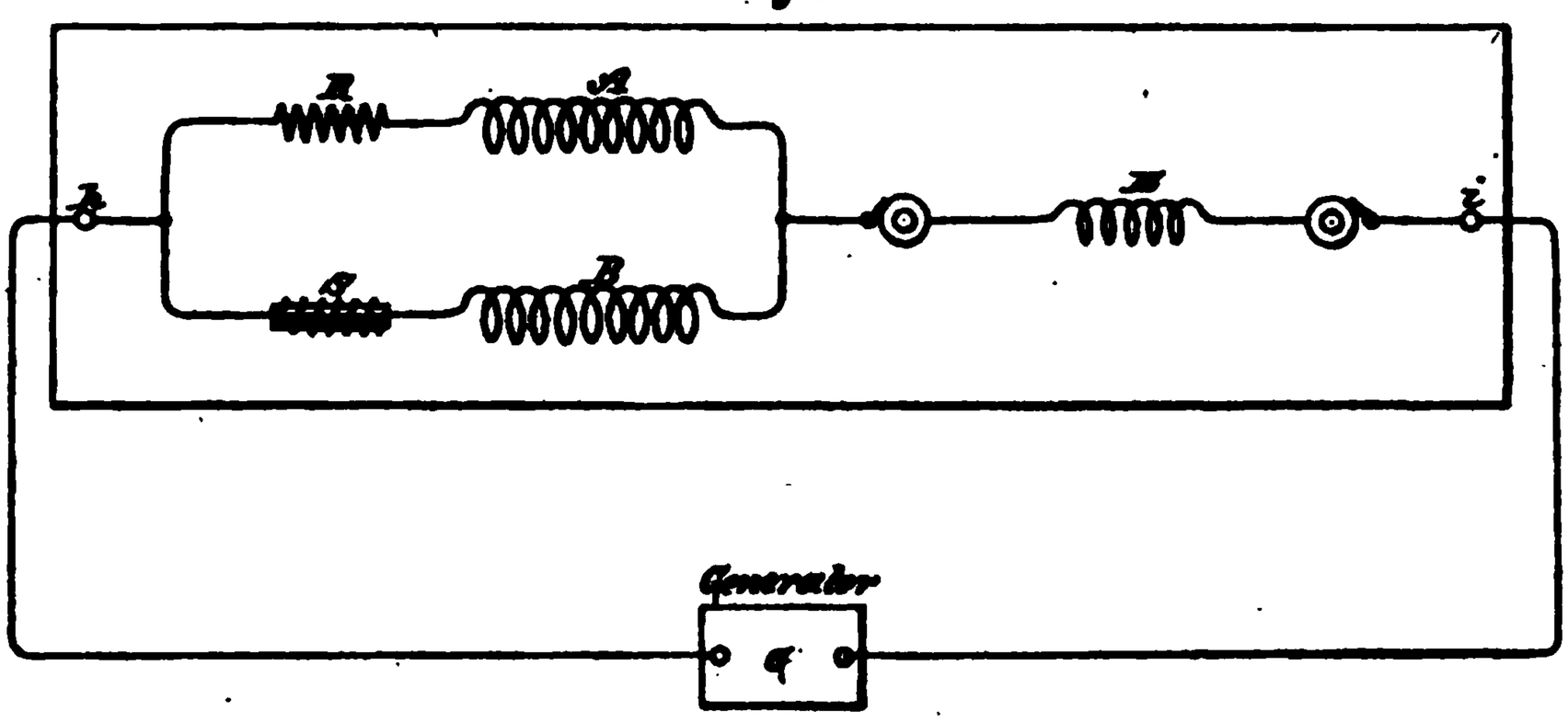

Fig. 3

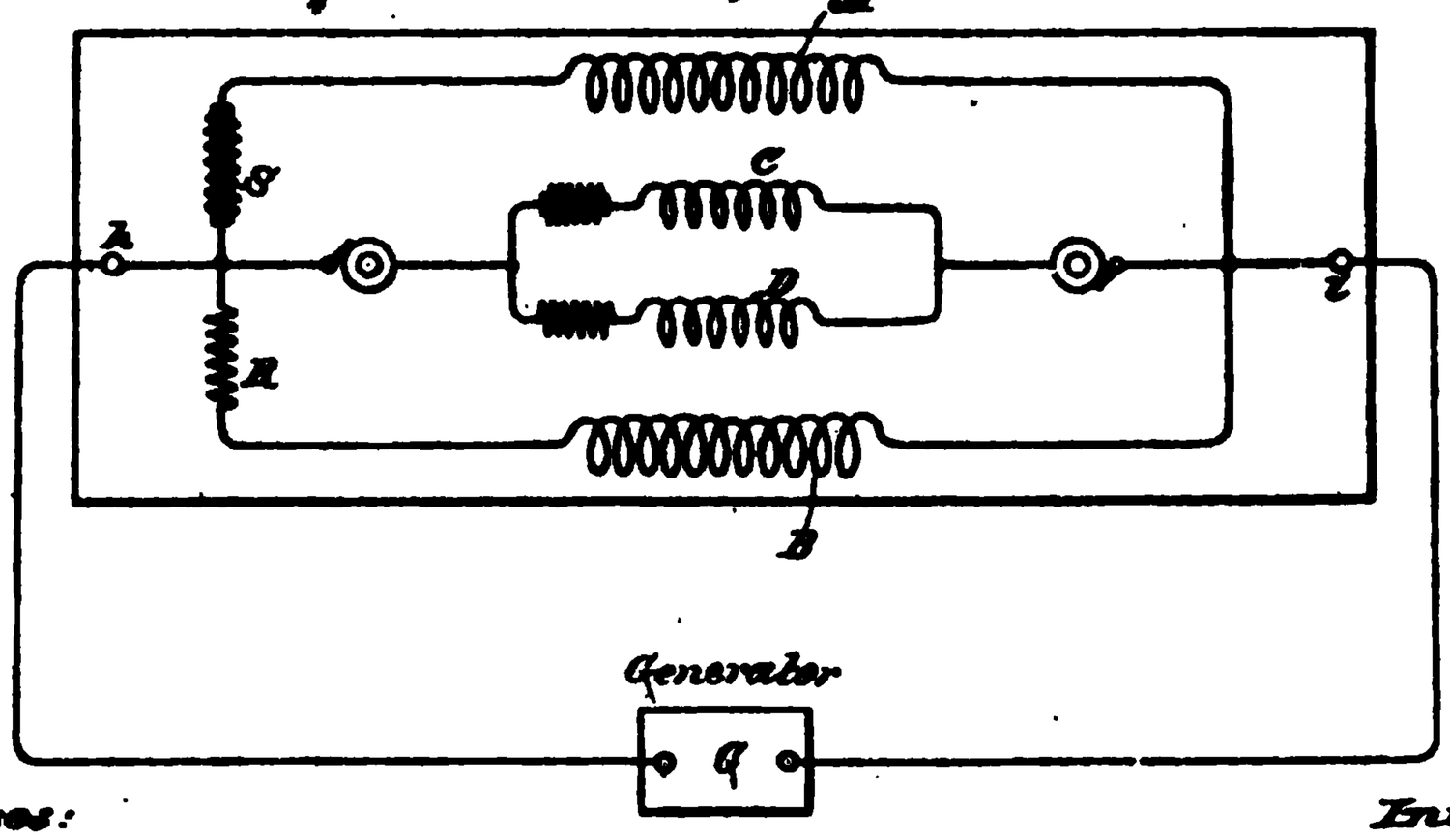

Witnesses:
Raphael Netter
Robt. F. Gaylord

Inventor
Nikola Tesla
By
Duncan, Curtis & Page,
Attorneys.

(No Model.) 2 Sheets—Sheet 2.

N. TESLA.

ELECTRO MAGNETIC MOTOR.

No. 416,191. Patented Dec. 3, 1889.

Fig. 4

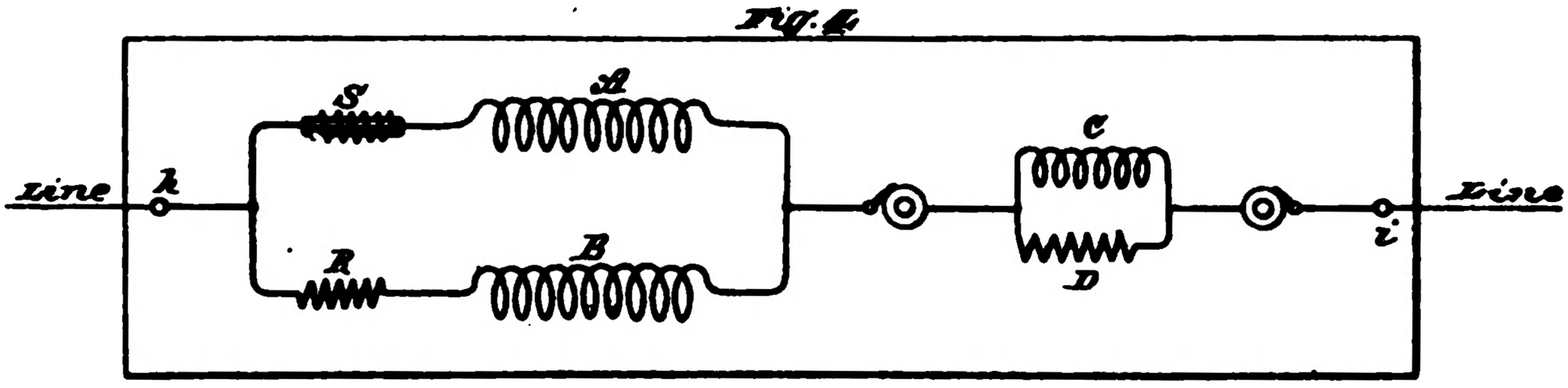

Fig. 5

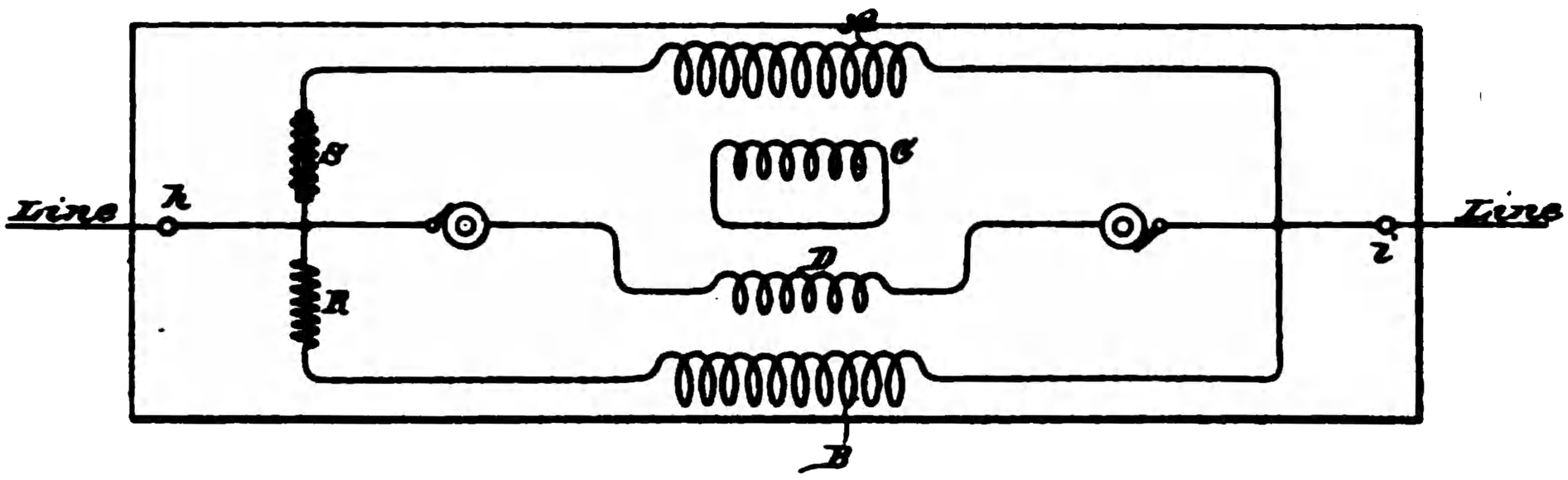

Fig. 6

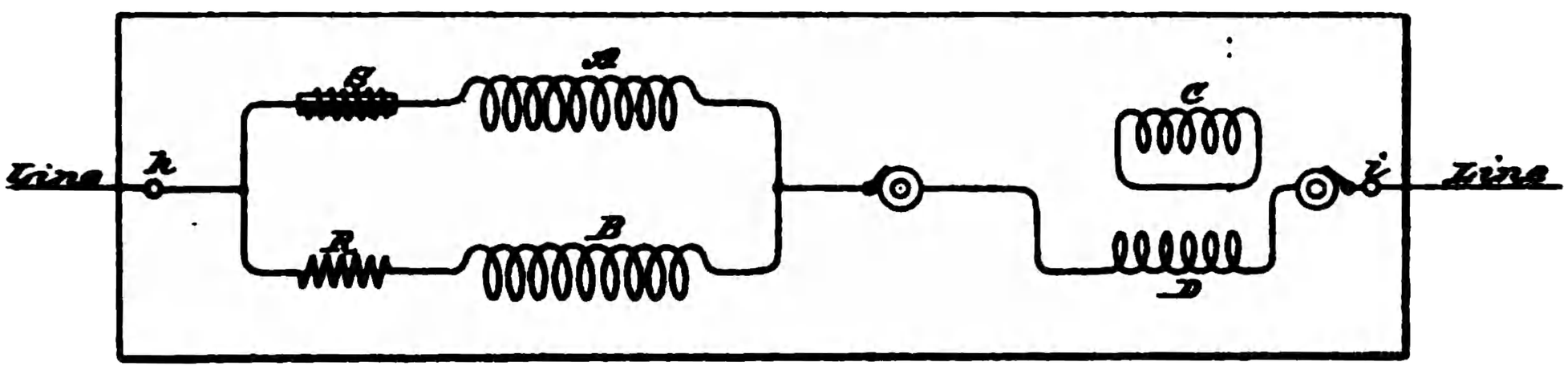

Fig. 7

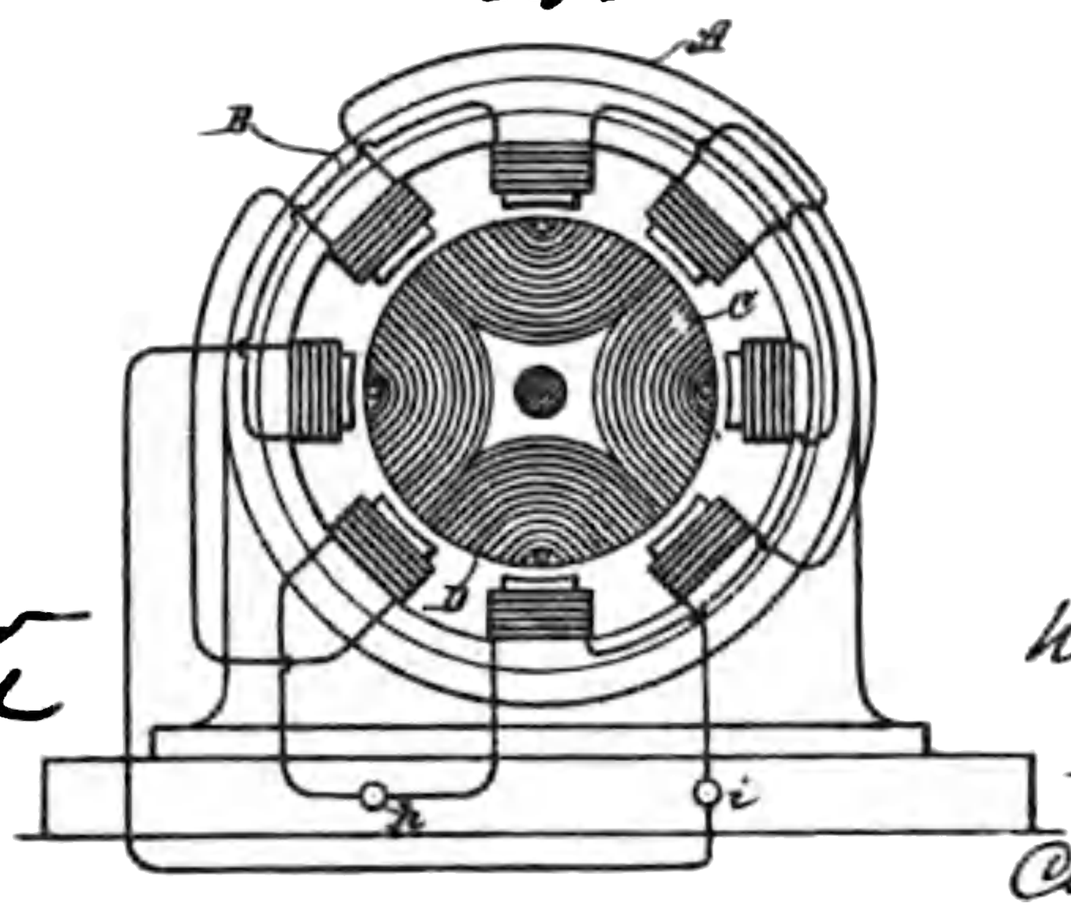

Witnesses:
Raphael Netter
Robt. F. Gaylord

Inventor
Nikola Tesla
By Duncan, Curtis & Page,
Attorneys.

tains effects corresponding to the resultant poles produced by the two field-circuits.

Fig. 3 represents a disposition in which both armature and field are wound with two sets of coils, all in multiple arc to the line or main circuit. The armature-coils are wound to correspond with the field-coils with respect to their self-induction. A modification of this plan is shown in Fig. 4—that is to say, the two field-coils and two armature-coils are in derivation to themselves and in series with one another. The armature-coils in this case, as in the previous figure, are wound for different self-induction to correspond with the field-coils.

Another modification is shown in Fig. 5. In this case only one armature-coil, as D, is included in the line-circuit, while the other, as C, is short-circuited.

In such a disposition as that shown in Fig. 2, or where only one armature-coil is employed, the torque on the start is somewhat reduced, while the tendency to synchronism is somewhat increased. In such a disposition, as shown in Fig. 5, the opposite conditions would exist. In both instances, however, there is the advantage of dispensing with one contact-ring.

In Fig. 5 the two field-coils and the armature-coil D are in multiple arc. In Fig. 6 this disposition is modified, coil D being shown in series with the two field-coils.

Fig. 7 is an outline of the general form of motor in which I have embodied this improvement. The circuit-connections between the armature and field coils are made, as indicated in the previous figures, through brushes and rings, which are not shown.

In the above description I have made use of the terms "armature" and "field;" but it will be understood that these are in this case convertible terms, for what is true of the field is equally so of the armature, except that one is stationary, the other capable of rotation.

I do not claim in this application the method or means of operating a double-circuit motor by making its circuits of different self-induction or in any way retarding the phases of current in one circuit more than in another, having made these features subject of other applications; but

What I claim is—

1. In an alternating-current motor, the combination, with field-circuits of different self-inductive capacity, of corresponding armature-circuits electrically connected therewith, as set forth.

2. In an alternating-current motor, the combination, with independent field-coils of different self-induction, of independent armature-coils, one or more in circuit with the field-coils and the others short-circuited, as set forth.

NIKOLA TESLA.

Witnesses:

ROBT. F. GAYLORD,
FRANK E. HARTLEY.

(No Model.) 2 Sheets—Sheet 1.

N. TESLA.

METHOD OF OPERATING ELECTRO MAGNETIC MOTORS.

No. 416,192. Patented Dec. 3, 1889.

Fig. 1

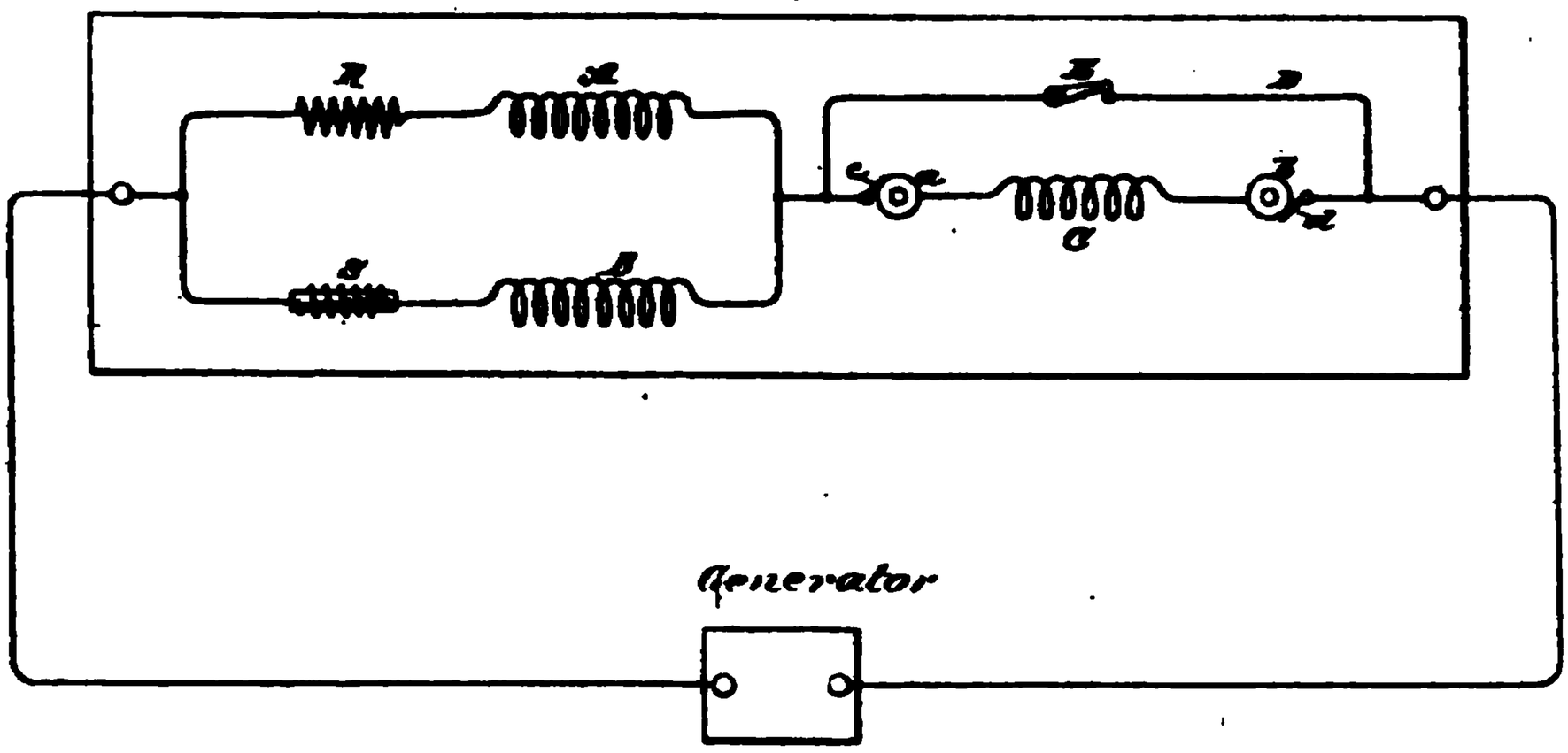

Fig. 2

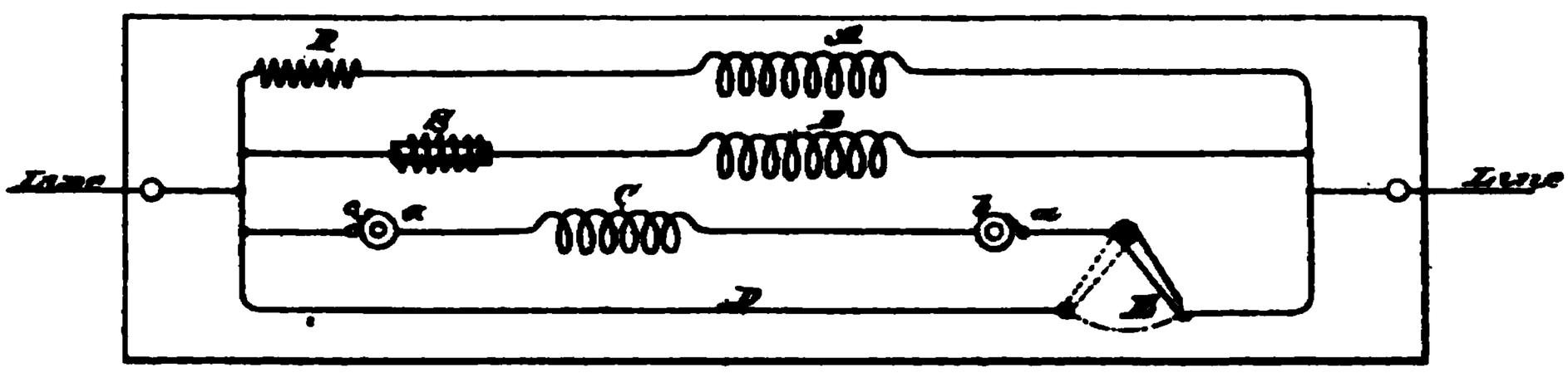

Fig. 3

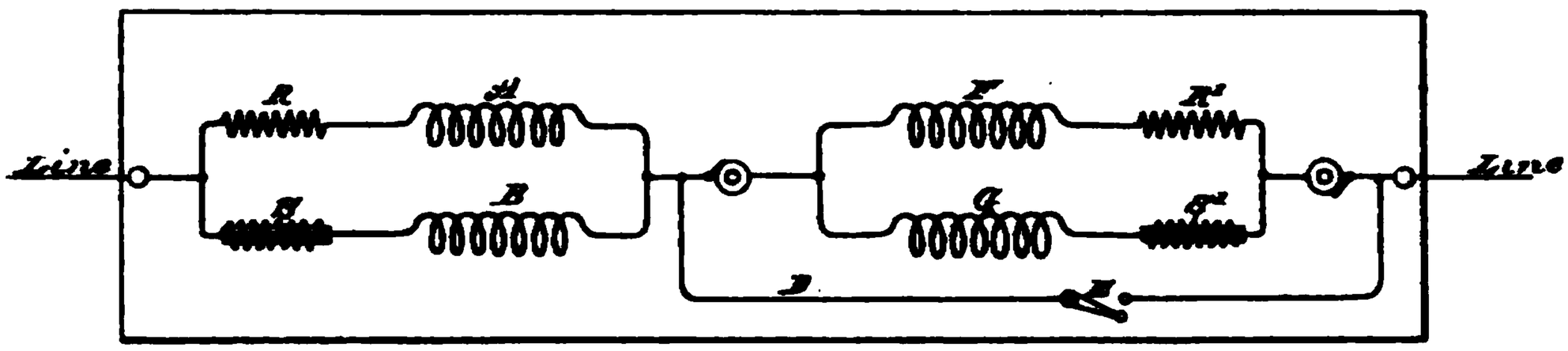

Witnesses:
Raphael Netter
Robt. F. Gaylord

Inventor
Nikola Tesla
By Duncan, Curtis & Page
Attorneys.

UNITED STATES PATENT OFFICE.

NIKOLA TESLA, OF NEW YORK, N. Y., ASSIGNOR TO THE TESLA ELECTRIC COMPANY, OF SAME PLACE.

METHOD OF OPERATING ELECTRO-MAGNETIC MOTORS.

SPECIFICATION forming part of Letters Patent No. 416,192, dated December 3, 1889.

Application filed May 20, 1889. Serial No. 311,414. (No model.)

To all whom it may concern:

Be it known that I, NIKOLA TESLA, a subject of the Emperor of Austria, from Smiljan, Lika, border country of Austria-Hungary, and a resident of New York, in the county and State of New York, have invented certain new and useful Improvements in Methods of Operating Electro-Magnetic Motors, of which the following is a specification, reference being had to the drawings accompanying and forming a part of the same.

In a patent granted to me April 16, 1889, No. 401,520, I have shown and described a method of starting and operating synchronizing motors which involved the transformation of the motor from a torque to a synchronizing motor. This I have heretofore done by a change of the circuit-connections, whereby on the start the poles or resultant attraction of the field-magnets of the motor were shifted or rotated by the action of the current until the motor reached synchronous speed, after which the poles were merely alternated. The present application is based upon another way of accomplishing this result, the main features being as follows: If an alternating current be passed through the field-coils only of a motor having two energizing-circuits of different self-induction and the armature-coils be short-circuited, the motor will have a strong torque, but little or no tendency to synchronism with the generator; but if the same current which energizes the field be passed also through the armature-coils the tendency to remain in synchronism is very considerably increased. This is due to the fact that the maximum magnetic effects produced in the field and armature more nearly coincide. This principle discovered by me I have utilized in the operation of motors. In other words, I construct a motor having independent field-circuits of different self-induction, which are joined in derivation to a source of alternating currents. The armature I wind with one or more coils, which are connected with the field-coils through contact rings and brushes, and around the armature-coils I arrange a shunt with means for opening or closing the same. In starting this motor I close the shunt around the armature-coils, which will therefore be in closed circuit. When the current is directed through the motor, it divides between the two circuits, (it is not necessary to consider any case where there are more than two circuits used,) which, by reason of their different self-induction, secure a difference of phase between the two currents in the two branches that produces a shifting or rotation of the poles. By the alternations of current other currents are induced in the closed—or short-circuited—armature-coils and the motor has a strong torque. When the desired speed is reached, the shunt around the armature-coils is opened and the current directed through both armature and field coils. Under these conditions the motor has a strong tendency to synchronism.

In the drawings hereto annexed I have illustrated several modifications of the plan above set forth for operating motors. The figures are diagrams, and will be explained in their order.

Figure 1: A and B designate the field-coils of the motor. As the circuits including these coils are of different self-induction, I have represented this by a resistance-coil R in circuit with A, and a self-induction coil S in circuit with B. The same result may of course be secured by the winding of the coils. C is the armature-circuit, the terminals of which are rings *a b*. Brushes *c d* bear on these rings and connect with the line and field circuits. D is the shunt or short circuit around the armature. E is the switch therein. The operation of these devices I have stated above.

It will be observed that in such a disposition as is illustrated in Fig. 1, the field-circuits A and B being of different self-induction, there will always be a greater lag of the current in one than the other, and that, generally, the armature phases will not correspond with either, but with the resultant of both. It is therefore important to observe the proper rule in winding the armature. For instance, if the motor have eight poles—four in each circuit—there will be four resultant poles, and hence the armature-winding should be such as to produce four poles, in order to constitute a true synchronizing motor.

Fig 2: This diagram differs from the previous one only in respect to the order of connections. In the present case the armature-coil, instead of being in series with the field-

coils, is in multiple arc therewith. The armature-winding may be similar to that of the field—that is to say, the armature may have two or more coils wound or adapted for different self-induction and adapted, preferably, to produce the same difference of phase as the field-coils. On starting the motor the shunt is closed around both coils. This is shown in Fig. 3, in which the armature-coils are F G. To indicate their different electrical character, I have shown in circuit with them, respectively, the resistance R′ and the self-induction coil S′. The two armature coils are in series with the field-coils and the same disposition of the shunt or short circuit D is used. It is of advantage in the operation of motors of this kind to construct or wind the armature in such manner that when short-circuited on the start it will have a tendency to reach a higher speed than that which synchronizes with the generator. For example, a given motor having, say, eight poles should run, with the armature-coil short-circuited, at two thousand revolutions per minute to bring it up to synchronism. It will generally happen, however, that this speed is not reached, owing to the fact that the armature and field currents do not properly correspond, so that when the current is passed hrough the armature (the motor not being quite up to synchronism) there is a liability that it would not "hold on," as it is termed. I therefore prefer to so wind or construct the motor that on the start, when the armature-coils are short-circuited, the motor will tend to reach a speed higher than the synchronous—as, for instance, double the latter. In such case the difficulty above alluded to is not felt, for the motor will always hold up to synchronism if the synchronous speed—in the case supposed of two thousand revolutions—is reached or passed. This may be accomplished in various ways; but for all practical purposes the following will suffice: I wind on the armature two sets of coils. On the start I short-circuit one only, thereby producing a number of poles on the armature, which will tend to run the speed up above the synchronous limit. When such limit is reached or passed, the current is directed through the other coil, which, by increasing the number of armature-poles, tends to maintain synchronism. In Fig. 4 such a disposition is shown. The motor having, say, eight poles contains two field-circuits A and B, of different self-induction. The armature has two coils F and G. The former is closed upon itself, the latter connected with the field and line through contact-rings *a b*, brushes *c d*, and a switch E. On the start the coil F alone is active and the motor tends to run at a speed above the synchronous; but when the coil G is connect[illegible] the circu[illegible] the number of armat[illegible] nerea[illegible] while the motor is [illegible] chr[illegible] motor. This dis[illegible] that the closed [illegible] the motor tor[illegible] at the same time the conditions are such that the motor comes out of synchronism more readily. To increase the tendency to synchronism, two circuits may be used on the armature, one of which is short-circuited on the start and both connected with the external circuit after the synchronous speed is reached or passed. This disposition is shown in Fig. 5. There are three contact-rings *a b e* and three brushes *c d f*, which connect the armature-circuits with the external circuit. On starting, the switch H is turned to complete the connection between one binding-post P and the field-coils. This short-circuits one of the armature-coils, as G. The other coil F is out of circuit and open. When the motor is up to speed, the switch H is turned back, so that the connection from binding-post P to the field-coils is through the coil G, and switch K is closed, thereby including coil F in multiple arc with the field-coils. Both armature-coils are thus active.

From the above-described instances it is evident that many other dispositions for carrying out the invention are possible.

I do not claim herein the method and means described and shown for operating a motor by producing artificially a difference of current phase in its independent energizing-circuits; nor do I claim, broadly, a motor having independent energizing-circuits of different self-induction and armature-circuits connected therewith, as these features are made subjects of other applications which I have filed.

What I claim is—

1. The method herein described of operating alternating-current motors having independent energizing-circuits, which consists in short-circuiting the armature circuit or circuits until the motor has reached or passed a synchronizing speed and then connecting said armature-circuits with the external circuit, as set forth.

2. The method of operating alternating-current motors having field-coils of different self-induction, which consists in directing alternating currents from an external source through the field-circuits only until the motor has reached a given speed and then directing said currents through both the field-circuits and one or more of the armature-circuits, as set forth.

3. The method of operating alternating-current motors having field-coils of different self-induction, which consists in directing alternating currents from an external source through the field-circuits and short-circuiting a part of the armature-circuits, and then when the motor has attained a given speed directing the alternating currents through both the [illegible]d and one or more of the armature-circuits, [illegible] set forth.

NIKOLA TESLA.

Witnesses:

ROBT. F. GAYLORD,

FRANK E. HARTLEY.

(No Model.)

N. TESLA.

ELECTRO MAGNETIC MOTOR.

No. 416,193. Patented Dec. 3, 1889.

Fig. 1

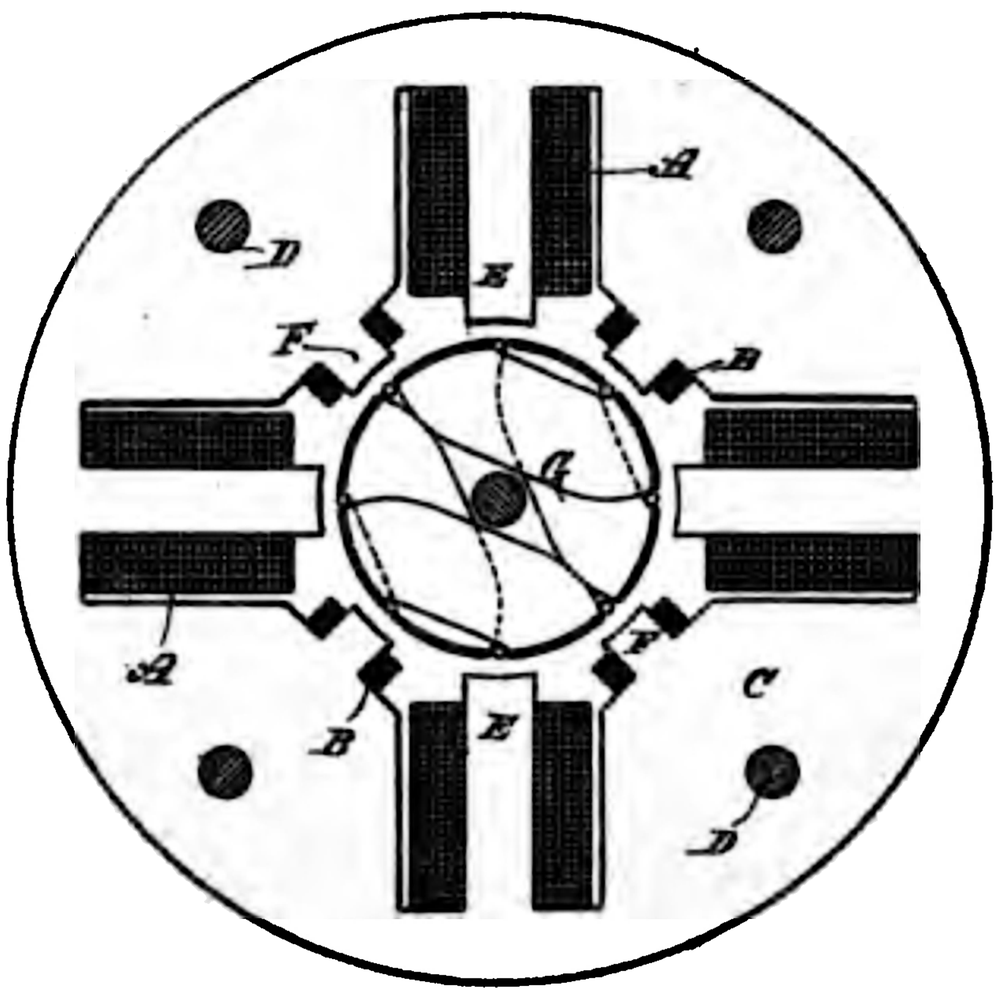

Fig. 2

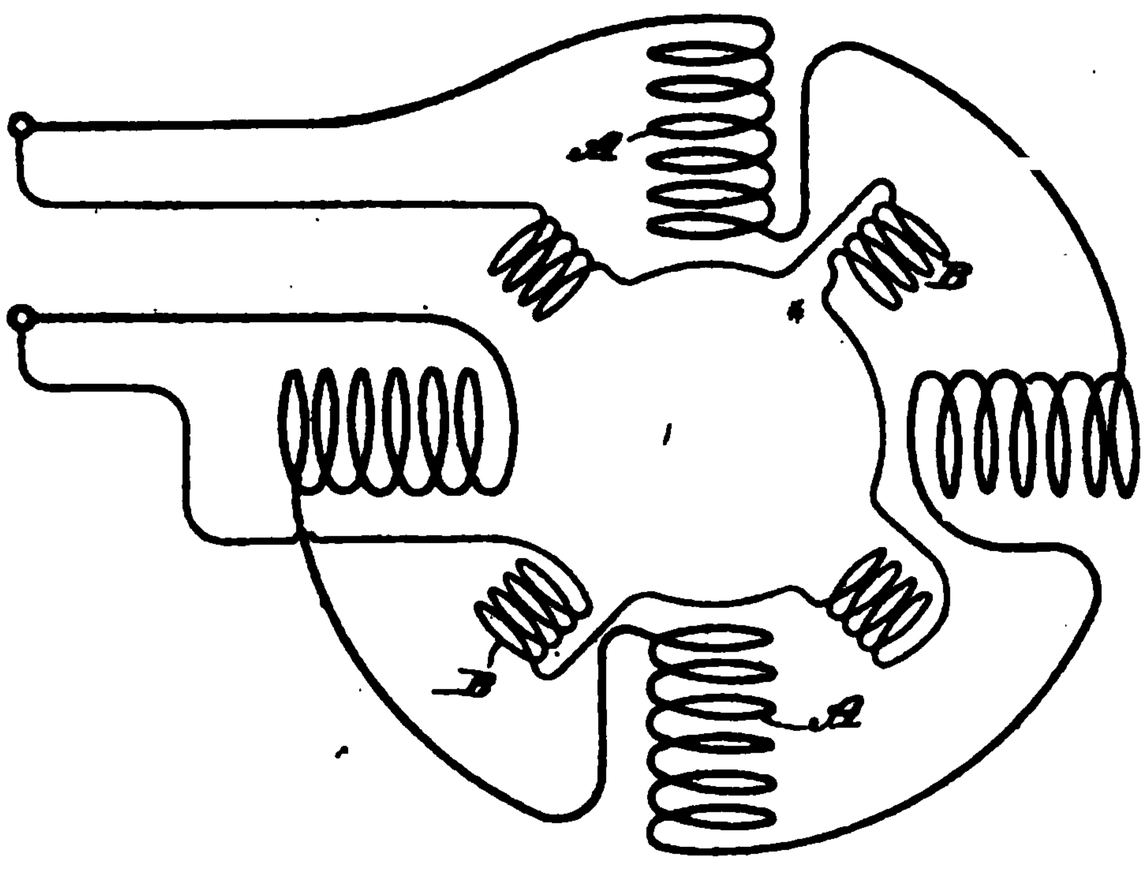

Witnesses:
Raphael Netter
Robt. F. Gaylord

Inventor
Nikola Tesla
By
Duncan, Curtis & Page
Attorneys.

UNITED STATES PATENT OFFICE.

NIKOLA TESLA, OF NEW YORK, N. Y., ASSIGNOR TO THE TESLA ELECTRIC COMPANY, OF SAME PLACE.

ELECTRO-MAGNETIC MOTOR.

SPECIFICATION forming part of Letters Patent No. 416,193, dated December 3, 1889.
Application filed May 20, 1889. Serial No. 311,415. (No model.)

To all whom it may concern:

Be it known that I, NIKOLA TESLA, a subject of the Emperor of Austria, from Smiljan, Lika, border country of Austria-Hungary, residing at New York, in the county and State of New York, have invented certain new and useful Improvements in Electro-Magnetic Motors, of which the following is a specification, reference being had to the accompanying drawings.

This invention relates to alternating-current motors of the general description invented by me, and in which two or more energizing-circuits are employed, through which alternating currents differing in phase are passed, with the result of producing a progressive shifting or rotation of the poles or points of maximum attractive effect.

In prior patents and applications I have shown and described various forms of motors of this kind. Among them are motors in which both energizing-circuits are electrically alike—that is to say, both have the same or approximately the same electrical resistance and self-induction—in the operation of which the alternating currents used are primarily of different phase. In others the difference of phase is artificially produced—as, for instance, in cases where the motor-circuits are of different resistance and self-induction, so that the same current divided between them will be retarded in one to a greater extent than in the other, and the requisite phase difference secured in this way. To this latter class generally my present invention relates.

The lag or rotation of the phases of an alternating current is directly proportional to the self-induction and inversely proportional to the resistance of the circuit through which the current flows. Hence, in order to secure the proper difference of phase between the two motor-circuits, it is desirable to make the self-induction in one much higher and the resistance much lower than the self-induction and resistance, respectively, in the other. At the same time the magnetic quantities of the two poles or sets of poles which the two circuits produce should be approximately equal. These requirements, which I have found to exist in motors of this kind, have led me to the invention of a motor having the following general characteristics: The coils which are included in that energizing-circuit which is to have the higher self-induction I make of coarse wire, or a conductor of relatively low resistance, and I use the greatest possible length or number of turns. In the other set of coils I use a comparatively few turns of finer wire or a wire of higher resistance. Furthermore, in order to approximate the magnetic quantities of the poles excited by these coils, I use in the self-induction circuit cores much longer than those in the other or resistance circuit. I have shown in the drawings a motor embodying these features.

Figure 1 is a part-sectional view of the motor at right angles to the shaft. Fig. 2 is a diagram of the field-circuits.

In Fig. 2, let A represent the coils in one motor-circuit, and B those in the other. The circuit A is to have the higher self-induction. I therefore use a long length or a large number of turns of coarse wire in forming the coils of this circuit. For the circuit B, I use a smaller conductor, or a conductor of a higher resistance than copper, such as German silver or iron, and wind the coils with fewer turns. In applying these coils to a motor I build up a field-magnet of plates C, of iron or steel, secured together in the usual manner by bolts D. Each plate is formed with four (more or less) long cores E, around which is a space to receive the coil and an equal number of short projections F to receive the coils of the resistance-circuit. The plates are generally annular in shape, having an open space in the center for receiving the armature G, which I prefer to wind with closed coils. An alternating current divided between the two circuits is retarded as to its phases in the circuit A to a much greater extent than in the circuit B. By reason of the relative sizes and disposition of the cores and coils the magnetic effect of the poles E and F upon the armature closely approximate. These conditions are well understood and readily secured by one skilled in the art.

An important result secured by the construction herein shown of the motor is, that these coils which are designed to have the

higher self-induction are almost completely surrounded by iron, by which the retardation is considerably increased.

I do not claim herein, broadly, the method and means of securing rotation by artificially producing a greater lag of the current in one motor-circuit than in the other, nor the use of poles or cores of different magnetic susceptibility, as these are features which I have specially claimed in other applications filed by me.

What I claim is—

1. An alternating-current motor having two or more energizing-circuits, the coils of one circuit being composed of conductors of large size or low resistance and those of the other of fewer turns of wire of smaller size or higher resistance, as set forth.

2. In an alternating-current motor, the combination, with long and short field-cores, of energizing-coils included in independent circuits, the coils on the longer cores containing an excess of copper or conductor over that in the others, as set forth.

3. The combination, with a field-magnet composed of magnetic plates having an open center and pole-pieces or cores of different length, of coils surrounding said cores and included in independent circuits, the coils on the longer cores containing an excess of copper over that in the others, as set forth.

4. The combination, with a field-magnet composed of magnetic plates having an open center and pole-pieces or cores of different length, of coils surrounding said cores and included in independent circuits, the coils on the longer cores containing an excess of copper over that in the others and being set in recesses in the iron core formed by the plates, as set forth.

NIKOLA TESLA.

Witnesses:
ROBT. F. GAYLORD,
FRANK E. HARTLEY.

(No Model.)

N. TESLA

ELECTRIC MOTOR

No. 416,194. Patented Dec. 3, 1889

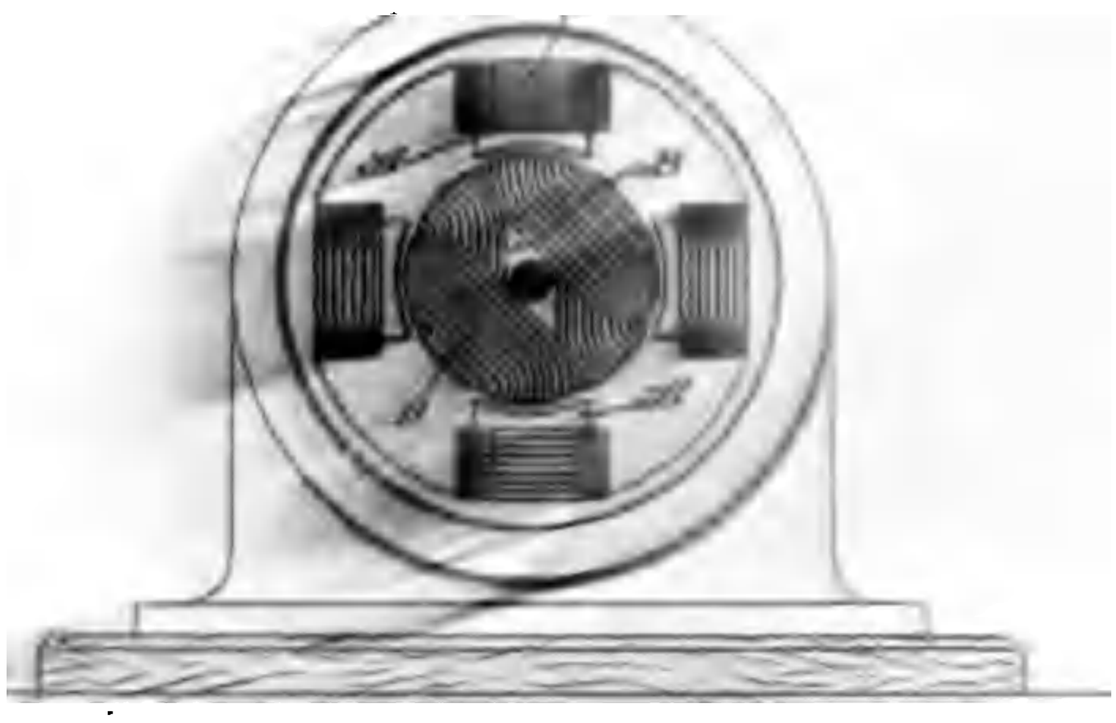

UNITED STATES PATENT OFFICE.

NIKOLA TESLA, OF NEW YORK, N. Y., ASSIGNOR TO THE TESLA ELECTRIC COMPANY, OF SAME PLACE.

ELECTRIC MOTOR.

SPECIFICATION forming part of Letters Patent No. 416,194, dated December 3, 1889.

Application filed May 20, 1889. Serial No. 311,418. (No model.)

To all whom it may concern:

Be it known that I, NIKOLA TESLA, a subject of the Emperor of Austria, from Smiljan, Lika, border country of Austria-Hungary, residing at New York, in the county and State of New York, have invented certain new and useful Improvements in Electro-Magnetic Motors, of which the following is a specification.

This invention relates to the alternating-current electro-magnetic motors invented by me, in which a progressive shifting or rotation of the poles or points of maximum magnetic effect is produced by the action of the alternating currents. These motors I have constructed in a great variety of ways. As instances, I have built motors with two or more energizing-circuits, which I connected up with corresponding circuits of a generator so that the motor will be energized by alternating currents differing primarily in phase. I have also built motors with independent energizing-circuits of different electrical character or self-induction, through which I have passed an alternating current the phases of which were artificially distorted by the greater retarding effect of one circuit over another. I have also constructed other forms of motor operating by magnetic or electric lag, which it is not necessary to describe herein in detail. although my present invention is applicable thereto. In such motors I use an armature wound with a coil or coils, which is sometimes connected with the external circuit and sometimes closed upon itself, and to both forms the present invention applies. In these motors the total energy supplied to effect their operation is equal to the sum of the energies expended in the armature and the field. The power developed, however, is proportionate to the product of these quantities. This product will be greatest when these quantities are equal; hence in constructing a motor I determine the mass of the armature and field cores and the windings of both and adapt the two so as to equalize as nearly as possible the magnetic quantities of both. In motors which have closed armature-coils this is only approximately possible, as the energy manifested in the armature is the result of inductive action from the other element; but in motors in which the coils of both armature and field are connected with the external circuit the result can be much more perfectly obtained.

In further explanation of my object let it be assumed that the energy as represented in the magnetism in the field of a given motor is ninety and that of the armature ten. The sum of these quantities, which represents the total energy expended in driving the motor, is one hundred; but, assuming that the motor be so constructed that the energy in the field is represented by fifty and that in the armature by fifty, the sum is still one hundred; but while in the first instance the product is nine hundred, in the second it is two thousand five hundred, and as the energy developed is in proportion to these products it is clear that those motors are the most efficient—other things being equal—in which the magnetic energies developed in the armature and field are equal. These results I obtain by using the same amount of copper or ampère turns in both elements when the cores of both are equal, or approximately so, and the same current energizes both; or in cases where the currents in one element are induced to those of the other I use in the induced coils an excess of copper over that in the primary element or conductor.

While I know of no way of illustrating this invention by a drawing such as will meet the formal requirements of an application for patent, I have appended for convenience a conventional figure of a motor such as I employ. I would state, however, that I believe that with the problem before him which I have herein stated, and the solution which I have proposed, any one skilled in the art will be able to carry out and apply this invention without difficulty.

Generally speaking, if the mass of the cores of armature and field be equal, the amount of copper or ampère turns of the energizing-coils on both should also be equal; but these conditions will be modified in well-understood ways in different forms of machine. It will be understood that these results are most advantageous when existing under the conditions presented when the motor is running

with its normal load, and in carrying out the invention this fact should be taken into consideration.

Referring to the drawing, A is the field-magnet, B the armature, C the field-coils, and D the armature-coils, of the motor.

The motors described in this application, except as to the features specifically pointed out in the claims, are described and claimed in prior patents granted to and applications filed by me, and are not herein claimed.

What I claim is—

1. An electro-magnetic motor having field and armature magnets of equal strength or magnetic quantity when energised by a given current, as set forth.

2. In an alternating-current motor, the combination, with field and armature cores of equal mass, of energizing-coils containing equal amounts of copper, as herein set forth.

NIKOLA TESLA.

Witnesses:

ROBT. F. GAYLORD,

FRANK E. HARTLEY.

(No Model.) 3 Sheets—Sheet 1.

N. TESLA.

ELECTRO MAGNETIC MOTOR.

No. 416,195. Patented Dec. 3, 1889.

Fig. 1

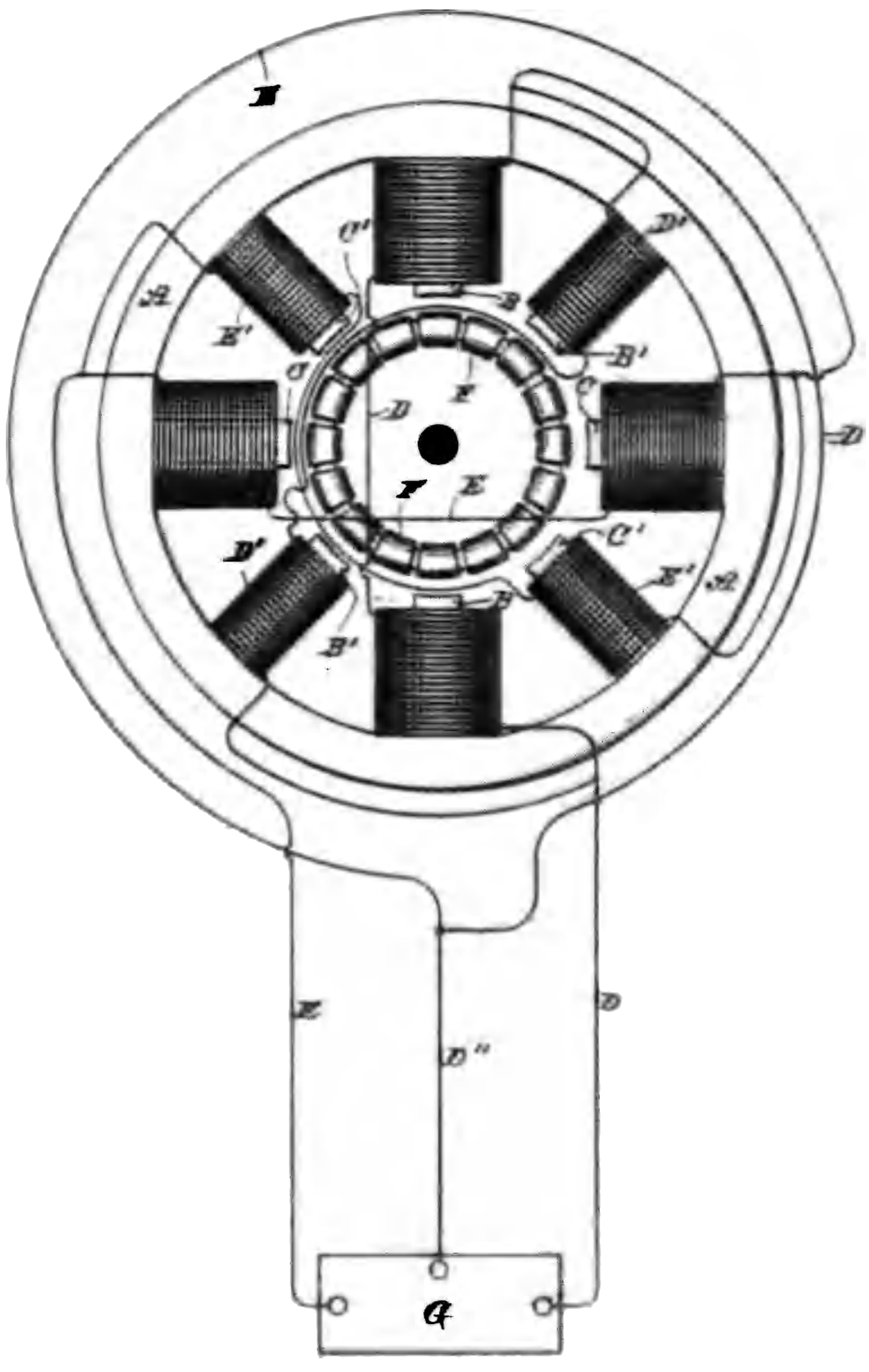

Witnesses:
Raphael Netter
Robt. F. Gaylord

Inventor:
Nikola Tesla
By
Chas. Curtis Page

(el.) 3 Sheets—Sheet 2.

N. TESLA.

ELECTRO MAGNETIC MOTOR.

16,195. Patented Dec. 3, 1889.

Fig. 2

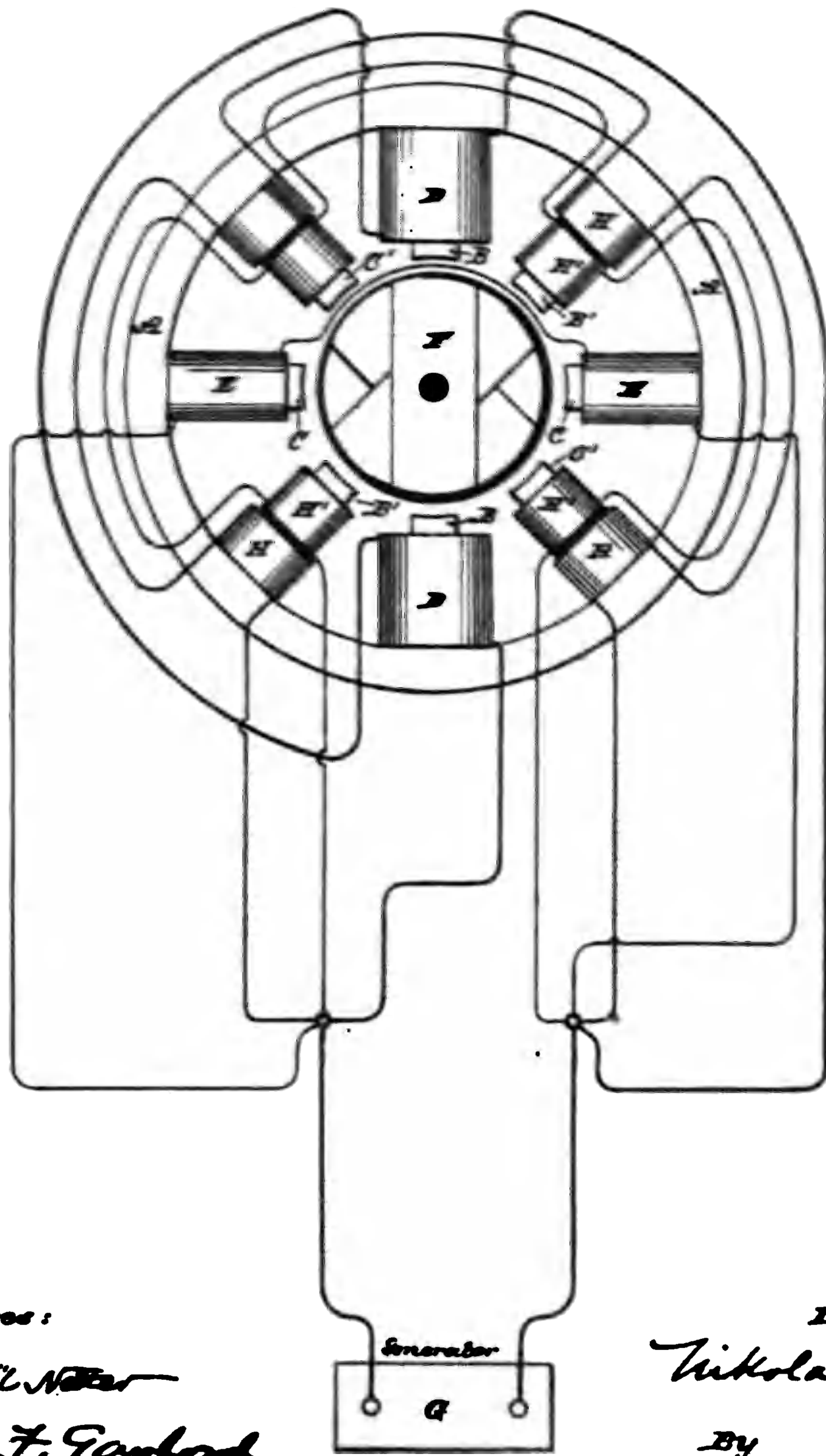

Witnesses:

[illegible]

[illegible] T. F. Gaylord

Inventor

Nikola Tesla

By

Duncan, Curtis & Page

Attorneys.

(No Model.) 3 Sheets—Sheet 2.

N. TESLA.

ELECTRO MAGNETIC MOTOR.

No. 416,195. Patented Dec. 3, 1889.

Fig. 2

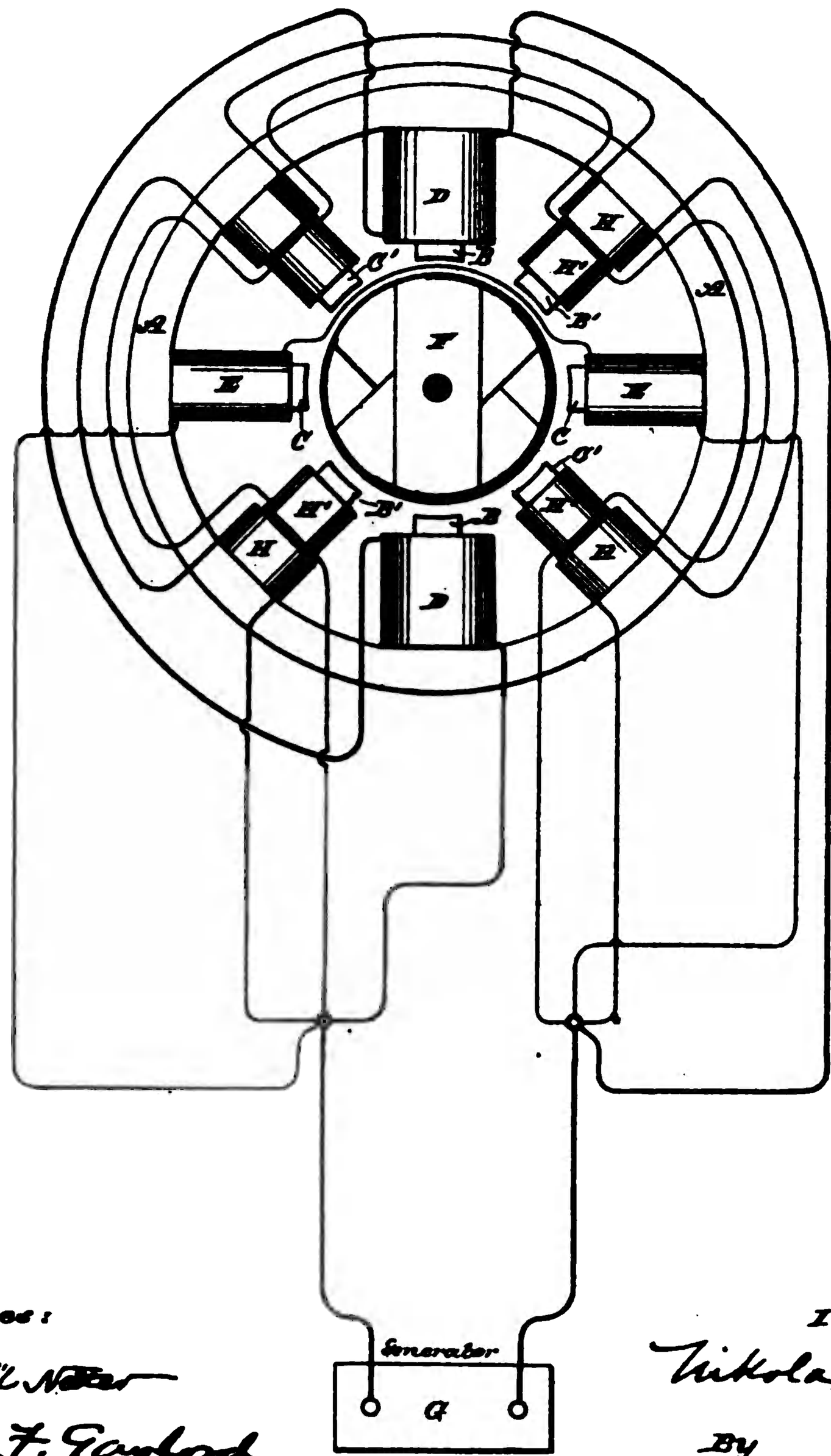

Witnesses:
Raphael Netter
Robt. F. Gaylord

Inventor:
Nikola Tesla
By
Duncan, Curtis & Page
Attorneys.

UNITED STATES PATENT OFFICE.

NIKOLA TESLA, OF NEW YORK, N. Y., ASSIGNOR TO THE TESLA ELECTRIC COMPANY, OF SAME PLACE.

ELECTRO-MAGNETIC MOTOR.

SPECIFICATION forming part of Letters Patent No. 416,195, dated December 3, 1889.

Application filed May 20, 1889. Serial No. 311,419. (No model.)

To all whom it may concern:

Be it known that I, NIKOLA TESLA, a subject of the Emperor of Austria, from Smiljan, Lika, border country of Austria-Hungary, residing at New York, in the county and State of New York, have invented certain new and useful Improvements in Electro-Magnetic Motors, of which the following is a specification, reference being had to the drawings accompanying and forming a part of the same.

This invention relates to that form of alternating-current motor invented by me, in which there are two or more energizing-circuits through which alternating currents differing in phase are caused to pass. I have in prior patents and applications shown various forms or types of this motor—first, motors having two or more energizing-circuits of the same electrical character, and in the operation of which the currents used differ primarily in phase; second, motors with a plurality of energizing-circuits of different electrical character, in or by means of which the difference of phase is produced artificially, and, third, motors with a plurality of energizing-circuits, the currents in one being induced from currents in another. I shall hereinafter show the application of my present invention to these several types. Considering the structural and operative conditions of any one of them—as, for example, that first-named—the armature which is mounted to rotate in obedience to the co-operative influence or action of the energizing-circuits has coils wound upon it which are closed upon themselves and in which currents are induced by the energizing-currents with the object and result of energizing the armature-core; but under any such conditions as must exist in these motors it is obvious that a certain time must elapse between the manifestations of an energizing-current impulse in the field-coils, and the corresponding magnetic state or phase in the armature established by the current induced thereby; consequently a given magnetic influence or effect in the field which is the direct result of a primary-current impulse will have become more or less weakened or lost before the corresponding effect in the armature indirectly produced has reached its maximum. This is a condition unfavorable to efficient working in certain cases—as, for instance, when the progress of the resultant poles or points of maximum attraction is very great, or when a very high number of alternations is employed—for it is apparent that a stronger tendency to rotation will be maintained if the maximum magnetic attractions or conditions in both armature and field coincide, the energy developed by a motor being measured by the product of the magnetic quantities of the armature and field.

The object, therefore, in this invention is to so construct or organize these motors that the maxima of the magnetic effects of the two elements—the armature and field—shall more nearly coincide. This I accomplish in various ways, which I may best explain by reference to the drawings, in which various plans for accomplishing the desired results are illustrated.

Figure 1: This is a diagrammatic illustration of a motor system such as I have described in my prior patents, and in which the alternating currents proceed from independent sources and differ primarily in phase.

A designates the field-magnet or magnetic frame of the motor; B B, oppositely-located pole-pieces adapted to receive the coils of one energizing-circuit; and C C, similar pole-pieces for the coils of the other energizing-circuit. These circuits are designated, respectively, by D E, the conductor D″ forming a common return to the generator G. Between these poles is mounted an armature—for example, a ring or annular armature, wound with a series of coils F, forming a closed circuit or circuits. The action or operation of a motor thus constructed is now well understood. It will be observed, however, that the magnetism of poles B, for example, established by a current-impulse in the coils thereon, precedes the magnetic effect set up in the armature by the induced current in coils F. Consequently the mutual attraction between the armature and field-poles is considerably reduced. The same conditions will be found to exist if, instead of assuming the poles B or C as acting independently, we regard the ideal resultant of both acting together, which is the real condition. To remedy this, I construct the motor-

field with secondary poles B′ C′, which are situated between the others. These pole-pieces I wind with coils D′ E′, the former in derivation to the coils D, the latter to coils E. The main or primary coils D and E are wound for a different sef-induction from that of the coils D′ and E′, the relations being so fixed that if the currents in D and E differ, for example, by a quarter-phase, the currents in each secondary coil, as D′ E′, will differ from those in its appropriate primary D or E by, say, forty-five degrees, or one-eighth of a period.

I explain the action of this motor as follows: Assuming that an impulse or alternation in circuit or branch E is just beginning while in the branch D it is just falling from maximum, the conditions of a quarter-phase difference. The ideal resultant of the attractive forces of the two sets of poles B C therefore may be considered as progressing from poles B to poles C while the impulse in E is rising to maximum and that in D is falling to zero or minimum. The polarity set up in the armature, however, lags behind the manifestations of field magnetism, and hence the maximum points of attraction in armature and field, instead of coinciding, are angularly displaced. This effect is counteracted by the supplemental poles B′ C′. The magnetic phases of these poles succeed those of poles B C by the same, or nearly the same, period of time as elapses between the effect of the poles B C and the corresponding induced effect in the armature; hence the magnetic conditions of poles B′ C′ and of the armature more nearly coincide and a better result is obtained. As poles B′ C′ act in conjunction with the poles in the armature established by poles B C, so in turn poles C B act similarly with the poles set up by B′ C′, respectively. Under such conditions the retardation of the magnetic effect of the armature and that of the secondary poles will bring the maximum of the two more nearly into coincidence and a correspondingly-stronger torque or magnetic attraction secured.

In such a disposition as is shown in Fig. 1 it will be observed that as the adjacent pole-pieces of either circuit are of like polarity they will have a certain weakening effect upon one another. I therefore prefer to remove the secondary poles from the direct influence of the others. This I may do by constructing a motor with two independent sets of fields, and with either one or two armatures electrically connected, or by using two armatures and one field. These modifications will be illustrated hereinafter.

Fig. 2 is a diagrammatic illustration of a motor and system in which the difference of phase is artificially produced. There are two coils D D in one branch and two coils E E in the other branch of the main circuit from the generator G. These two circuits or branches are of different self-induction, one, as D, being higher than the other. For convenience I have indicated this by making coils D much larger than coils E. By reason of this difference in the electrical character of the two circuits the phases of current in one are retarded to a greater extent than the other. Let this difference be thirty degrees. A motor thus constructed will rotate under the action of an alternating current; but as happens in the case previously described the corresponding magnetic effects of the armature and field do not coincide owing to the time that elapses between a given magnetic effect in the armature and the condition of the field that produces it. I therefore employ the secondary or supplemental poles B′ C′. There being thirty degrees difference of phase between the currents in coils D E, the magnetic effects of poles B′ C′ should correspond to that produced by a current differing from the current in coils D or E by fifteen degrees. This I may accomplish by winding each supplemental pole B′ C′ with two coils H H′. The coils H are included in a derived circuit having the same self-induction as circuit D, and coils H′ in a circuit having the same self-induction as circuit E, so that if these circuits differ by thirty degrees the magnetism of poles B′ C′ will correspond to that produced by a current differing from that in either D or E by fifteen degrees. This is true in all other cases. For example, if in Fig. 1 the coils D′ E′ be replaced by the coils H H′ included in derived circuits, the magnetism of the poles B′ C′ will correspond in effect or phase, if it may be so termed, to that produced by a current differing from that in either circuit D or E by forty-five degrees, or one-eighth of a period.

This invention as applied to a derived-circuit motor is illustrated in Figs. 3 and 4. The former is an end view of the motor with the armature in section and a diagram of connections, and Fig. 4 a vertical section through the field. These figures are also drawn to show one of the dispositions of two fields that may be adopted in carrying out the invention. The poles B B C C are in one field, the remaining poles in the other. The former are wound with primary coils I J and secondary coils I′ J′, the latter with coils K L. The primary coils I J are in derived circuits, between which, by reason of their different self-induction, there is a difference of phase, say, of thirty degrees. The coils I′ K are in circuit with one another, as also are coils J′ L, and there should be a difference of phase between the currents in coils K and L and their corresponding primaries of, say, fifteen degrees. If the poles B C are at right angles, the armature-coils should be connected directly across, or a single armature-core wound from end to end may be used; but if the poles B C be in line there should be an angular displacement of the armature-coils, as will be well understood.

The operation will be understood from the foregoing. The maximum magnetic condition

of a pair of poles, as B′ B′, coincides closely with the maximum effect in the armature, which lags behind the corresponding condition in poles B B.

There are many other ways of carrying out this invention, but they all involve the same broad principle of construction and operation.

In using expressions herein to indicate a coincidence of the magnetic phases or effects in one set of field-magnets with those set up in the armature by the other I refer only to approximate results; but this of course will be understood.

What I claim is—

1. In an alternating-current motor, the combination, with an armature wound with closed coils, of main and supplemental field magnets or poles, one set of which is adapted to exhibit their maximum magnetic effect simultaneously with that set up in the armature by the action of the other, as set forth.

2. In an electro-magnetic motor, the combination, with an armature, of a plurality of field or energizing coils included, respectively, in main circuits adapted to produce a given difference of phase and supplemental or secondary circuits adapted to produce an intermediate difference of phase, as set forth.

NIKOLA TESLA.

Witnesses:

R. J. STONEY, Jr.,

JOHN GILLESPIE.

(No Model.)

N. TESLA.

ELECTRO MAGNETIC MOTOR.

No. 418,248. Patented Dec. 31, 1889.

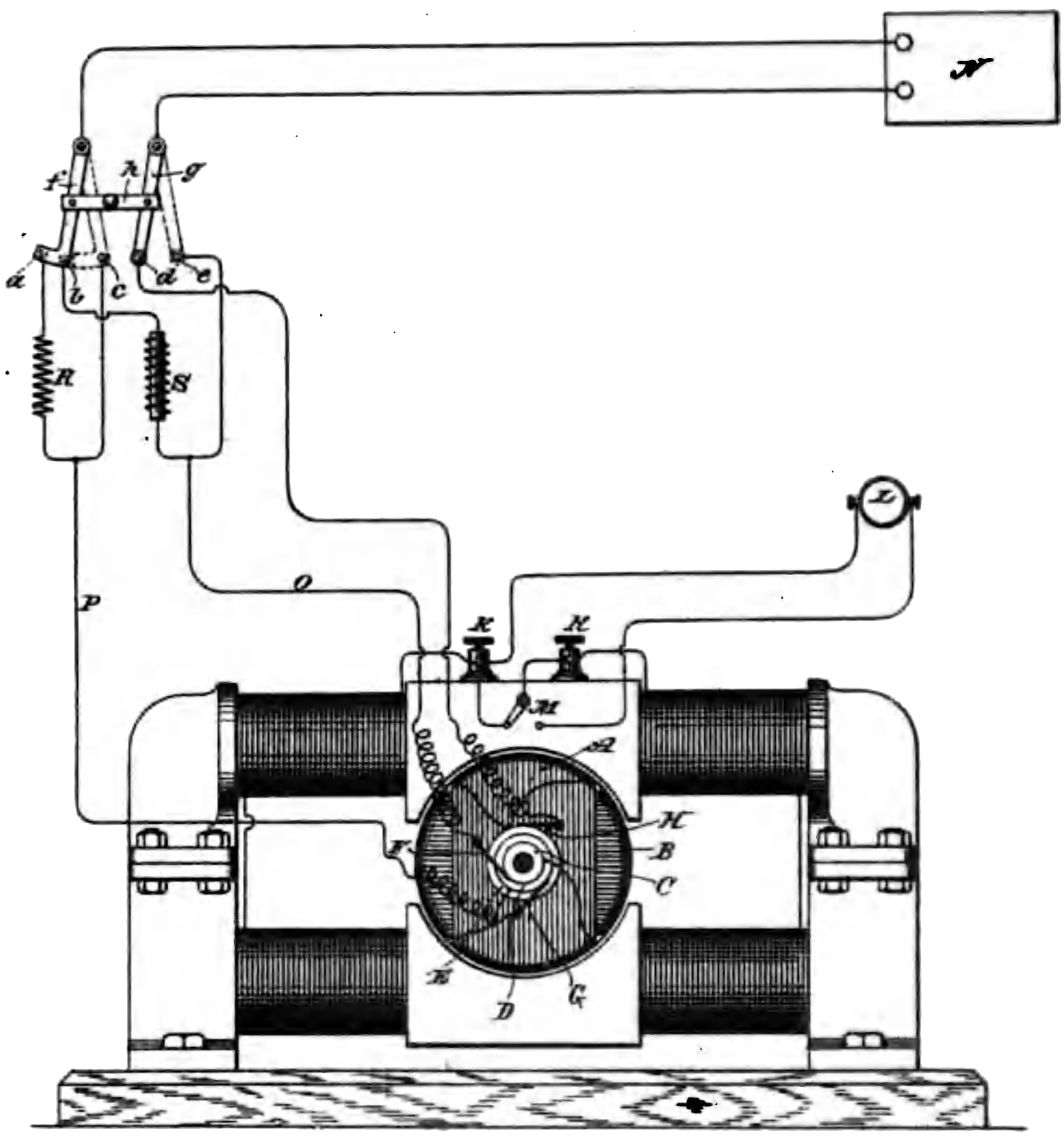

Witnesses:
Raphael Netter
Robt. F. Gaylord

Inventor
Nikola Tesla
By
Duncan, Curtis & Page
Attorneys.

UNITED STATES PATENT OFFICE.

NIKOLA TESLA, OF NEW YORK, N. Y., ASSIGNOR TO THE TESLA ELECTRIC COMPANY, OF SAME PLACE.

ELECTRO-MAGNETIC MOTOR.

SPECIFICATION forming part of Letters Patent No. 418,248, dated December 31, 1889.

Application filed May 20, 1889. Serial No. 311,420. (No model.)

To all whom it may concern:

Be it known that I, NIKOLA TESLA, a subject of the Emperor of Austria-Hungary, formerly of Smiljan, Lika, border country of Austria-Hungary, but now residing at New York, in the county and State of New York, have invented certain new and useful Improvements in Methods of Operating Electro-Magnetic Motors, of which the following is a specification, reference being had to the drawing accompanying and forming a part of the same.

In a patent granted to me April 16, 1889, No. 401,520, I have shown and described a method of operating alternating-current motors by first shifting or rotating their magnetic poles until they had reached or passed a synchronous speed and then alternating the poles, or, in other words, by transforming the motor by a change of circuit-connections from one operated by the action of two or more independent energizing-currents to a motor operated by a single current or several acting as one.

The present invention is a specific way of carrying out the same invention; and it consists in the following method: On the start I progressively shift the magnetic poles of one element or field of the motor by alternating currents differing in phase and passed through independent energizing-circuits and short-circuit the coils of the other element. When the motor thus started reaches or passes the limit of speed synchronous with the generator, I connect up the coils previously short-circuited with a source of direct current and by a change of the circuit-connections produce a simple alternation of the poles. The motor then continues to run in synchronism with the generator. There are many specifically-different ways in which this may be carried out, but I have selected one for illustrating the principle. This is illustrated in the annexed drawing, which is a side view of a motor with a diagram of the circuits and devices used in the system.

The motor shown is one of the ordinary forms, with field-cores either laminated or solid and with a cylindrical laminated armature wound, for example, with the coils A B at right angles. The shaft of the armature carries three collecting or contact rings C D E. (Shown, for better illustration, as of different diameters.)

One end of coil A connects to one ring, as C, and one end of coil B connects with ring D. The remaining ends are connected to ring E. Collecting springs or brushes F G H bear upon the rings and lead to the contacts of a switch, to be hereinafter described. The field-coils have their terminals in binding-posts K K, and may be either closed upon themselves or connected with a source of direct current L by means of a switch M. The main or controlling switch has five contacts *a b c d e* and two levers *f g*, pivoted and connected by an insulating cross-bar *h*, so as to move in parallelism. These levers are connected to the line-wires from a source of alternating currents N. Contact *a* is connected to brush G and coil B through a dead-resistance R and wire P. Contact *b* is connected with brush F and coil A through a self-induction coil S and wire O. Contacts *c* and *e* are connected to brushes G F, respectively, through the wires P O, and contact *d* is directly connected with brush H. The lever *f* has a widened end, which may span the contacts *a b*. When in such position and with lever *g* on contact *d*, the alternating currents divide between the two motor-coils, and by reason of their different self-induction a difference of current-phase is obtained that starts the motor in rotation. In starting, as I have above stated, the field-coils are short-circuited.

When the motor has attained the desired speed, the switch is shifted to the position shown in dotted lines—that is to say, with the levers *f g* resting on points *c e*. This connects up the two armature-coils in series, and the motor will then run as a synchronous motor. The field-coils are thrown into circuit with the direct-current source when the main switch is shifted.

What I claim herein as my invention is—

1. The method of operating electro-magnetic motors, which consists in first progressively shifting or rotating the magnetic poles of one element until it has reached a synchronous speed and then alternating said poles and passing a direct current through the coils of the other element, as herein set forth.

2. The method of operating electro-mag-

motors, which consists in short-circuit-coils of one element, as the field-mag-l passing through the energizing-coils other element, as the armature, alter-currents differing in phase, and then, he motor has attained a given speed, through the field-coils a direct current and through the armature-coils alternating currents coinciding in phase.

NIKOLA TESLA.

Witnesses:
R. J. STONEY, Jr.,
E. P. COFFIN.

(No Model.) 2 Sheets—Sheet 1.

N. TESLA.

ELECTRO MAGNETIC MOTOR.

No. 424,036. Patented Mar. 25, 1890.

Fig. 1

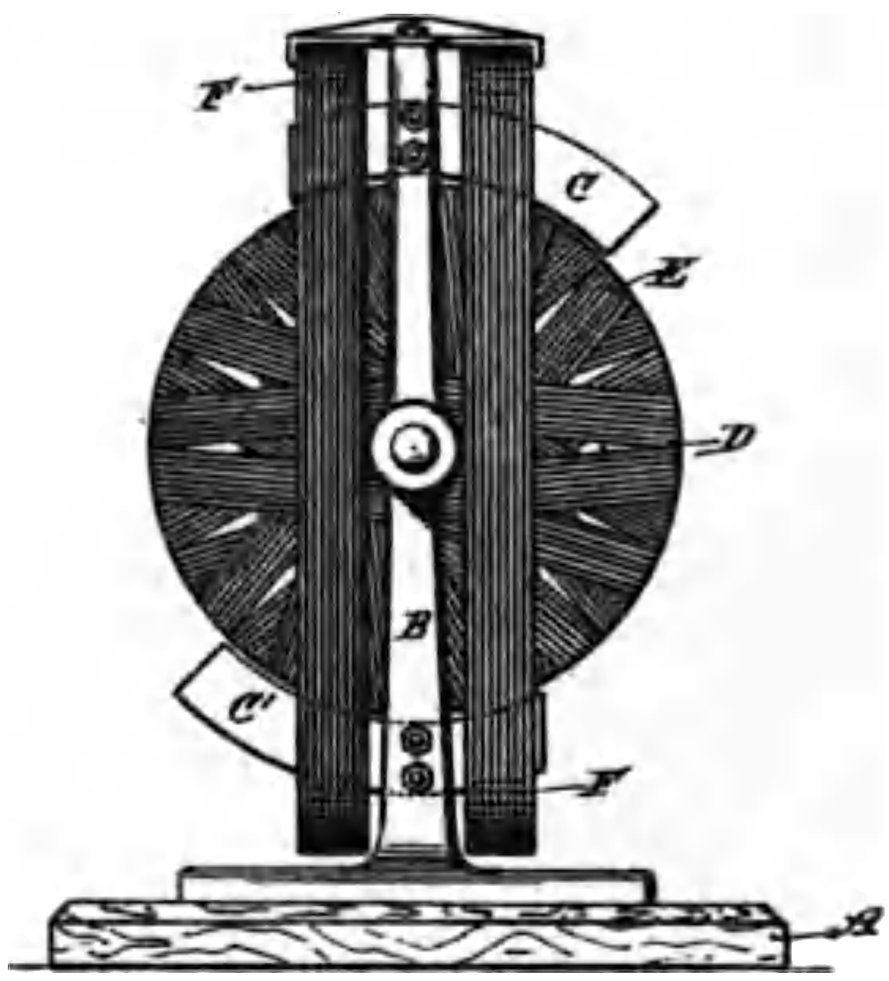

Fig. 2

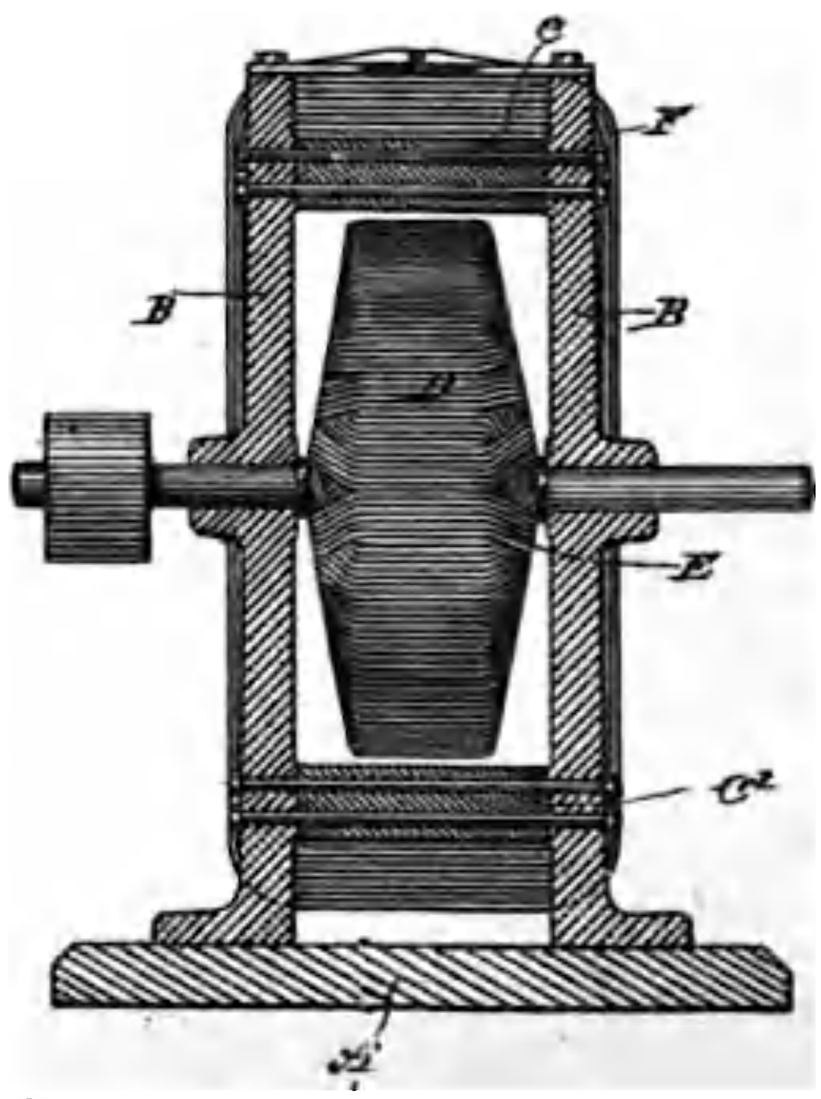

Witnesses:
Raphael Netter
Frank R. Hartley

Inventor
Nikola Tesla
By
Duncan, Curtis & Page
Attorneys.

(No Model.) 2 Sheets—Sheet 2.

N. TESLA.

ELECTRO MAGNETIC MOTOR.

No. 424,036. Patented Mar. 25, 1890.

Fig. 3

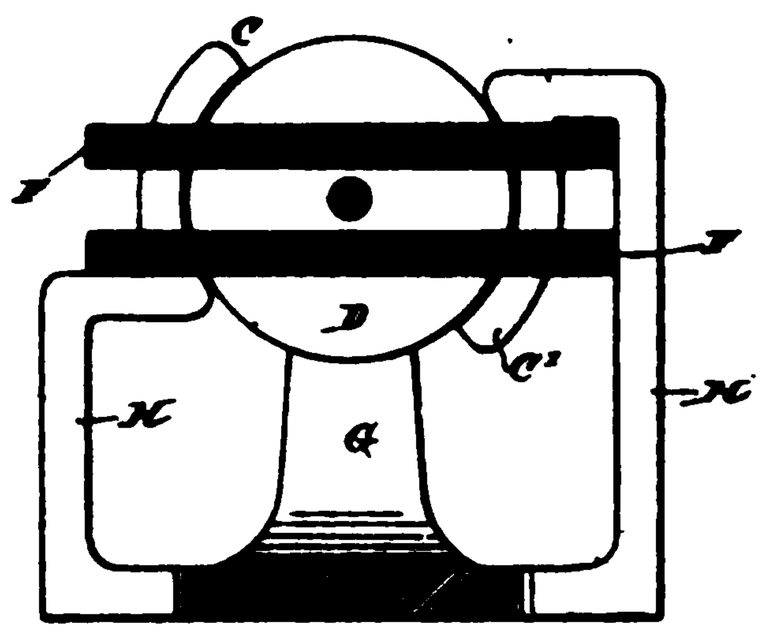

Fig. 4

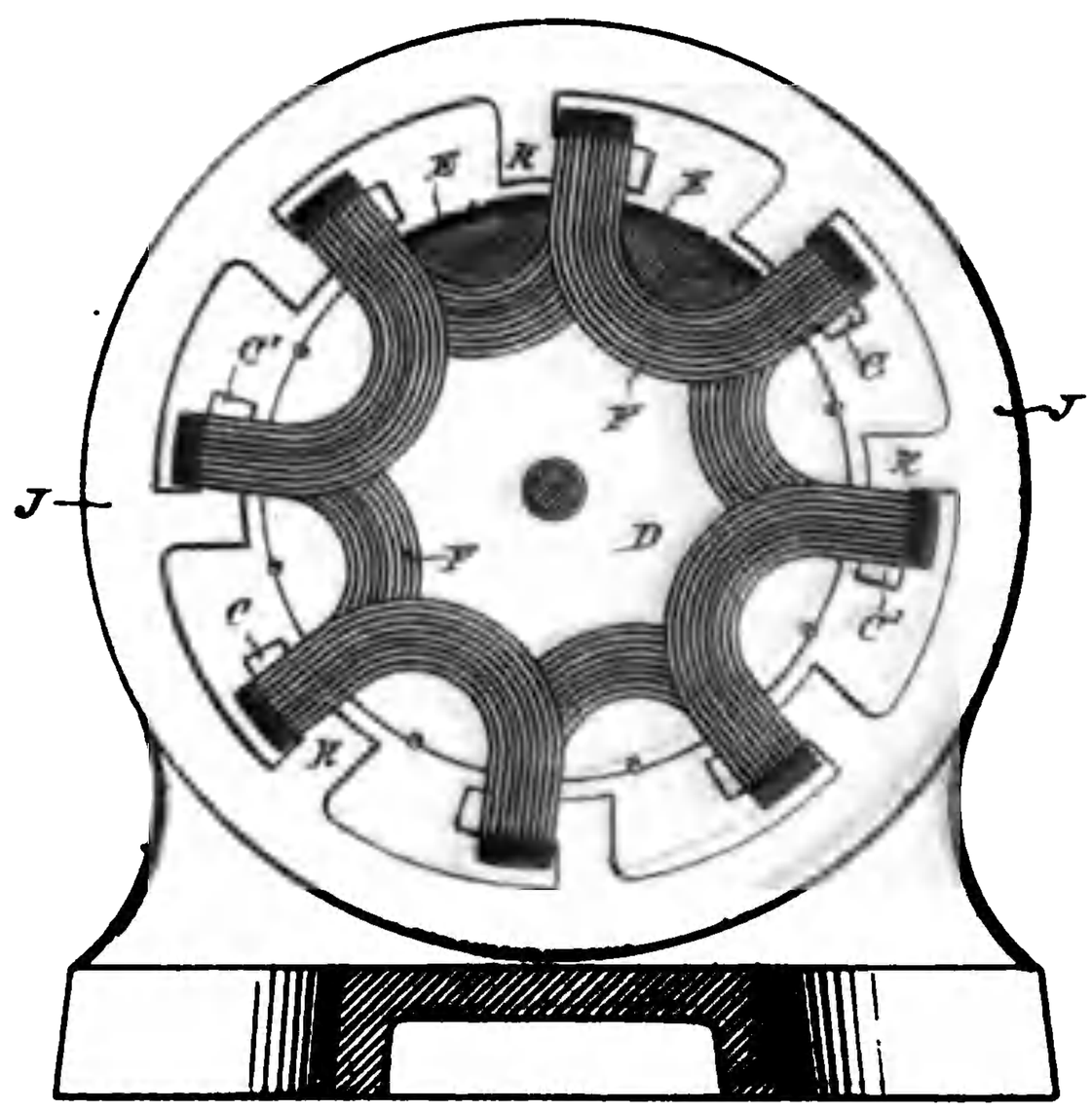

Witnesses:
Raphael Netter
Frank E. Hartley

Inventor
Nikola Tesla
By Curtis & Page
Attorneys.

UNITED STATES PATENT OFFICE.

NIKOLA TESLA, OF NEW YORK, N. Y., ASSIGNOR TO THE TESLA ELECTRIC COMPANY, OF SAME PLACE.

ELECTRO-MAGNETIC MOTOR.

SPECIFICATION forming part of Letters Patent No. 424,036, dated March 25, 1890.

Application filed May 20, 1889. Serial No. 311,416. (No model.)

To all whom it may concern:

Be it known that I, NIKOLA TESLA, a subject of the Emperor of Austria-Hungary, from Smiljan, Lika, border country of Austria-Hungary, residing at New York, in the county and State of New York, have invented certain new and useful Improvements in Electro-Magnetic Motors, of which the following is a specification, reference being had to the drawings accompanying and forming a part of the same.

I have invented and elsewhere described an electro-magnetic motor operated or adapted to be operated by an alternating electric current, and which is now commonly designated, whether correctly or not, a "magnetic-lag" motor. The main distinguishing features of this motor are the following: An armature is mounted within the magnetizing influence of a certain number of field magnets or poles of different magnetic susceptibility—that is to say, poles of unequal length, mass, or composition—and wound with coils adapted in the operation of the motor to be connected to a source of alternating currents. When an alternating current is passed through the coils of such a motor, the field magnets or poles do not appear to manifest their attractive effect upon the armature simultaneously, the magnetic attraction of some appearing to lag behind that of others, with the result of producing a torque and rotation of the motor. Generally I have made such motors with closed armature-coils.

I have invented another form of motor, which, for similar reasons, may be called a "magnetic-lag" motor; but in operation it differs from that which I have above described in that the attractive effects or phases of the poles, while lagging behind the phases of current which produce them, are manifested simultaneously and not successively.

To carry out this invention I employ a motor embodying the principle of construction of a motor described and claimed in an application filed by me January 8, 1889, No. 295,745, to the extent that both the armature and field receive their magnetism from a single energizing-coil or a plurality of coils acting as one.

A motor which embodies my invention, with certain modifications thereof, is illustrated in the accompanying drawings.

Figure 1 is a side view of the motor in elevation. Fig. 2 is a part-sectional view at right angles to Fig. 1. Fig. 3 is an end view in elevation and part section of a modification, and Fig. 4 is a similar view of another modification.

In Figs. 1 and 2, A designates a base or stand, and B B the supporting-frame of the motor. Bolted to the said supporting-frame are two magnetic cores or pole-pieces C C′, of iron or soft steel. These may be subdivided or laminated, in which case hard iron or steel plates or bars should be used, or they should be wound with closed coils. D is a circular disk-armature built up of sections or plates of iron and mounted in the frame between the pole-pieces C C′, which latter are preferably curved to conform to the circular shape thereof. I may wind this disk with a number of closed coils E. F F are the main energizing-coils, supported in any convenient manner by the supporting-frame, or otherwise, but so as to include within their magnetizing influence both the pole-pieces C C′ and the armature D. The pole-pieces C C′ project out beyond the coils F F on opposite sides, as indicated in the drawings. If an alternating current be passed through the coils F F, rotation of the armature will be produced, and this rotation I explain by the following apparent action or mode of operation: An impulse of current in the coils F F establishes two polarities in the motor. The protruding end of pole-piece C, for instance, will be of one sign, and the corresponding end of pole-piece C′ will be of the opposite sign. The armature also exhibits two poles at right angles to the coils F F, like poles to those in the pole-pieces being on the same side of the coils. While the current is flowing there is no appreciable tendency to rotation developed; but after each current impulse ceases or begins to fall the magnetism in the armature and in the ends of the pole-pieces C C′ lags or continues to manifest itself, which produces a rotation of the armature by the repellent force between the more closely approximating points of maximum magnetic effect. This effect is continued by the reversal of current, the polarities of field and armature being simply reversed. One or both of the elements—the armature or field—may be wound with closed

induced coils to intensify this effect, although in the drawings I have shown but one of the fields, each element of the motor really constitutes a field, wound with the closed coils, the currents being induced mainly in those convolutions or coils which are parallel to the coils F F. A modified form of this motor is shown in Fig. 3. In this form G is one of two standards that support the bearings for the armature-shaft. H H are uprights or sides of a frame, preferably magnetic, the ends C C′ of which are bent, substantially as shown, to conform to the shape of the armature D and form field-magnet poles. The construction of the armature may be the same as in the previous figure, or it may be simply a magnetic disk or cylinder, as shown, and a coil or coils F F are secured in position to surround both the armature and the poles C C′. The armature is detachable from its shaft, the latter being passed through the armature after it has been inserted in position. The operation of this form of motor is the same in principle as that previously described and needs no further explanation.

One of the most important features in alternating-current motors is that they should be adapted to and capable of running efficiently in the alternating systems in present use, in which almost without exception the generators yield a very high number of alternations. Such a motor I have designed by a development of the principle of the motor shown in Fig. 3, making a multipolar motor, which is illustrated in Fig. 4. In the construction of this motor I employ an annular magnetic frame J, with inwardly-extending ribs or projections K, the ends of which all bend or turn in one direction and are generally shaped to conform to the curved surface of the armature. Coils F F are wound from one part K to the one next adjacent, the ends or loops of each coil or group of wires being carried over toward the shaft, so as to form U-shaped groups of convolutions at each end of the armature. The pole-pieces C C′, being substantially concentric with the armature, form ledges, along which the coils are laid and should project to some extent beyond the coils, as shown. The cylindrical or drum armature D is of the same construction as in the other motors described, and is mounted to rotate within the annular frame J and between the U-shaped ends or bends of the coils F. The coils F are connected in multiple or in series with a source of alternating currents, and are so wound that with a current or current impulse of given direction they will make the alternate pole-pieces C of one polarity and the other pole-pieces C′ of the opposite polarity. The principle of the operation of this motor is the same as the other herein described, for, considering any two pole-pieces C C′, a current impulse passing in the coil which bridges them or is wound over both tends to establish polarities in their ends of opposite sign and to set up in the armature-core between them a polarity of the same sign as that of the nearest pole-piece C. Upon the fall or cessation of the current impulse that established these polarities the magnetism which lags behind the current phase, and which continues to manifest itself in the polar projections C C′ and the armature, produces by repulsion a rotation of the armature. The effect is continued by each reversal of the current. What occurs in the case of one pair of pole-pieces occurs simultaneously in all, so that the tendency to rotation of the armature is measured by the sum of all the forces exerted by the pole-pieces, as above described. In this motor also the magnetic lag or effect is intensified by winding one or both cores with closed induced coils. The armature-core is shown as thus wound. When closed coils are used, the cores should be laminated.

It is evident that a pulsatory as well as an alternating current might be used to drive or operate the motors herein described; but I prefer to use alternating currents.

It will be understood that the degree of subdivision, the mass of the iron in the cores, their size, and the number of alternations in the current employed to run the motor must be taken into consideration in order to properly construct this motor. In other words, in all such motors the proper relations between the number of alternations and the mass, size, or quality of the iron must be preserved in order to secure the best results. These are matters, however, that are well understood by those skilled in the art.

What I claim is—

1. In an alternating-current motor, the combination, with the armature and field-cores, of stationary energizing-coils enveloping the said cores and adapted to produce polarities or poles in both, the field-cores extending out from the coils and constructed so as to exhibit the magnetic effect imparted to them after the fall or cessation of current impulse producing such effect, as set forth.

2. In an alternating-current motor, the combination, with an armature-core circular in configuration, of a supporting-frame, field-cores extending therefrom over portions of the periphery of the armature, and energizing-coils surrounding said armature and parts of the field-cores, as set forth.

3. The combination, with the rotatably-mounted armature, of the circular frame J, the ribs K, with polar extensions extending over portions of the armature, and the energizing-coils F, wound over portions of the pole-pieces and carried in loops over the ends of the armature, as herein set forth.

NIKOLA TESLA.

Witnesses:
R. J. STONEY, Jr.,
E. P. COFFIN.

(No Model.)

N. TESLA.

ALTERNATING CURRENT ELECTRO MAGNETIC MOTOR.

No. 433,700. Patented Aug. 5, 1890.

Fig. 1

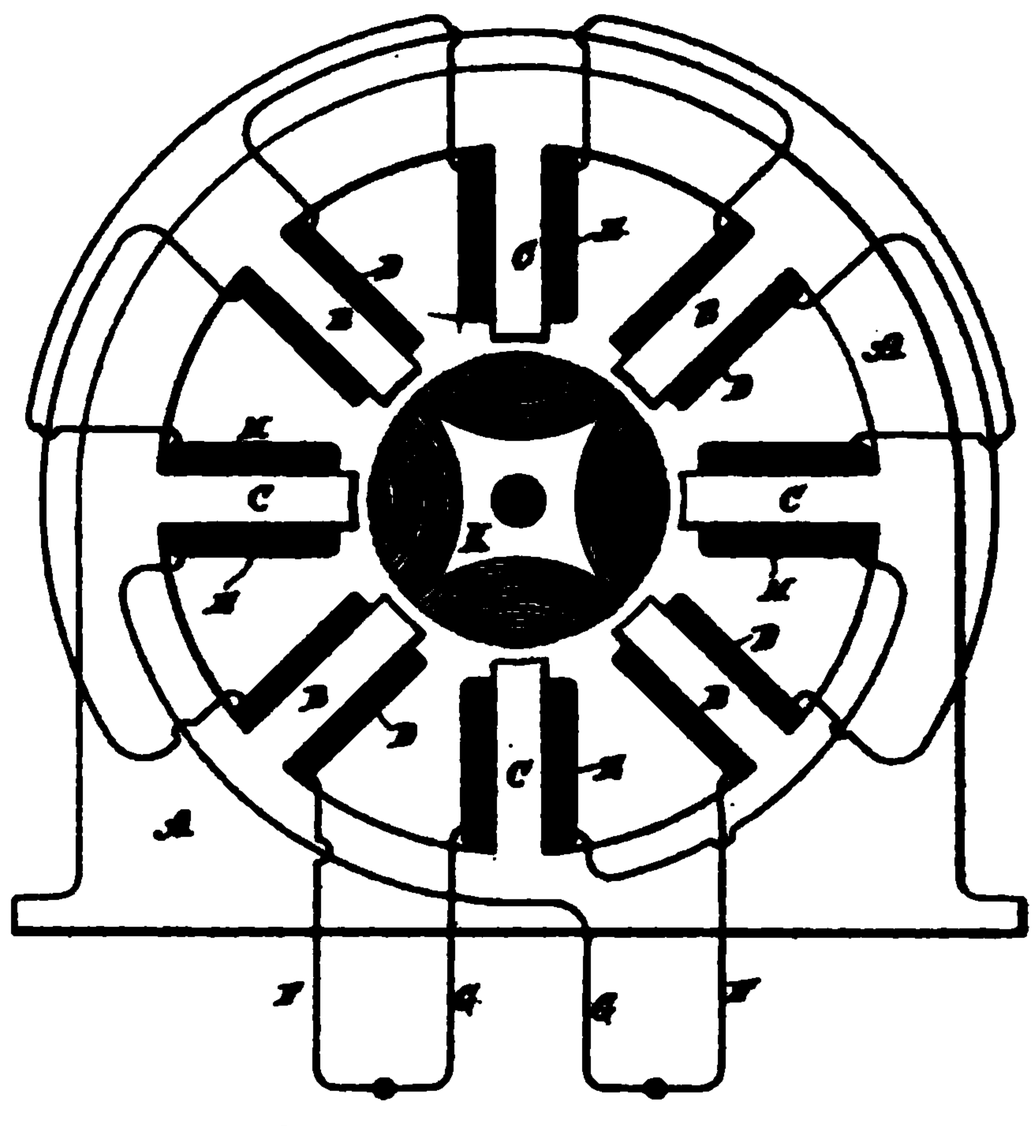

Fig. 2

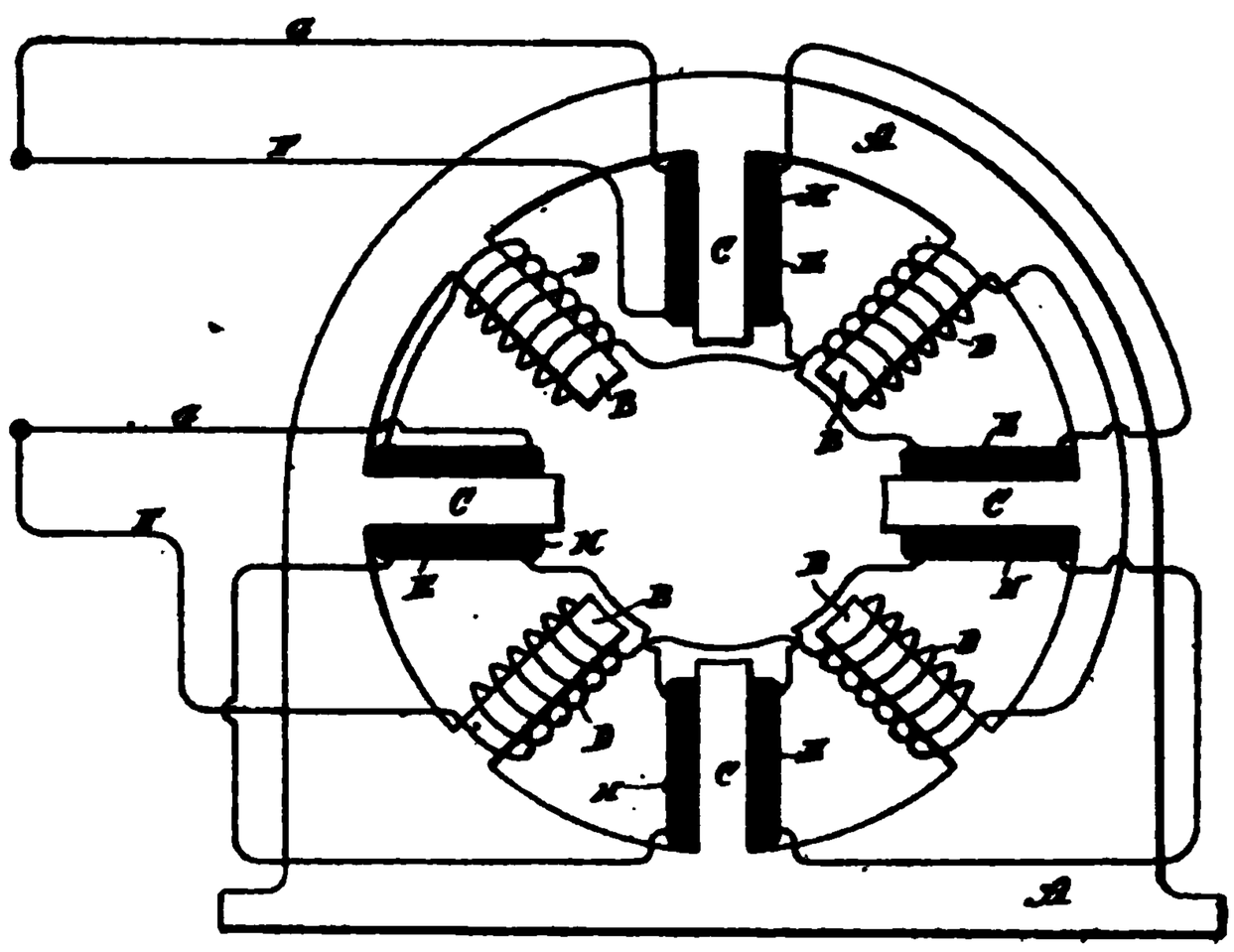

Witnesses:
Raphael Netter
Ernest Hopkinson

Inventor
Nikola Tesla
by
Duncan. Curtis & Page
Attorneys.

UNITED STATES PATENT OFFICE.

NIKOLA TESLA, OF NEW YORK, N. Y., ASSIGNOR TO THE TESLA ELECTRIC COMPANY, OF SAME PLACE.

ALTERNATING-CURRENT ELECTRO-MAGNETIC MOTOR.

SPECIFICATION forming part of Letters Patent No. 432,700, dated August 5, 1890.
Application filed March 28, 1890. Serial No. 345,262. (No model.)

To all whom it may concern:

Be it known that I, NIKOLA TESLA, a subject of the Emperor of Austria-Hungary, from Smiljan, Lika, border country of Austria-Hungary, residing at New York, in the county and State of New York, have invented certain new and useful Improvements in Alternating-Current Electro-Magnetic Motors, of which the following is a specification, reference being had to the drawings accompanying and forming a part of the same.

This invention is an improvement in that class of electro-magnetic motors in which the rotation is produced by the progressive movement or effect of the maximum magnetic points or poles produced by the conjoint action or effect of two energizing-circuits through which are passed alternating currents, or currents of rapidly-varying strength of a kindred nature.

The improvements subject of this application are more particularly applicable to that class of motors in which two or more sets of energizing-magnets are employed, and in which by artificial means a certain interval of time is made to elapse between the respective maximum or minimum periods or phases of their magnetic attraction or effect. This interval or difference in phase between the two sets of magnets, when artificially produced, is limited in extent. It is desirable, however, for the economical working of such motors that the strength or attraction of one set of magnets should be maximum, at the time when that of the other set is minimum and conversely; but these conditions have not heretofore been realized except in cases where the two currents have been obtained from independent sources in the same or different machines.

The object of the present invention is to establish conditions more nearly approaching the theoretical requirements of perfect working, or, in other words, to produce artificially a difference of magnetic phase by means of a current from a single primary source sufficient in extent to meet the requirements of practical and economical working.

In carrying out my invention I employ a motor with two sets of energizing or field magnets, each wound with coils connected with a source of alternating or rapidly-varying currents, but forming two separate paths or circuits. The magnets of one set I protect to a certain extent from the energizing action of the current by means of a magnetic shield or screen interposed between the magnet and its energizing-coil. This shield is properly adapted to the conditions of particular cases, so as to shield or protect the main core from magnetization until it has become itself saturated and no longer capable of containing all the lines of force produced by the current. By this means it will be seen that the energizing action begins in the protected set of magnets a certain arbitrarily-determined period of time later than in the other, and that by this means alone or in conjunction with other means or devices heretofore employed a practically-economical difference of magnetic phase may readily be secured.

The nature and operation of the invention will be more fully explained by reference to the accompanying drawings.

Figure 1 is a view of a motor, partly in section, with a diagram illustrating the invention. Fig. 2 is a similar view of a modification of the same.

In Fig. 1, which exhibits the simplest form of the invention, A A is the field-magnet of a motor, having, say, eight poles or inwardly-projecting cores B and C. The cores B form one set of magnets and are energized by coils D. The cores C, forming the other set, are energized by coils E, and the coils are connected, preferably, in series with one another, in two derived or branched circuits F G, respectively, from a suitable source of current. Each coil E is surrounded by a magnetic shield H, which is preferably composed of an annealed, insulated, or oxidized iron wire wrapped or wound on the coils in the manner indicated, so as to form a closed magnetic circuit around the coils and between the same and the magnetic cores C. Between the pole pieces or cores B C is mounted the armature K, which, as is usual in this type of machines, is wound with coils L closed upon themselves. The operation resulting from this disposition is as follows: If a current impulse be di-

rected through the two circuits of the motor, it will quickly energize the cores B, but not so the cores C, for the reason that in passing through the coils E there is encountered the influence of the closed magnetic circuits formed by the shields H. The first effect is to effectively retard the current impulse in circuit G, while at the same time the proportion of current which does pass does not magnetize the cores C, which are shielded or screened by the shields H. As the increasing electro-motive force then urges more current through the coils E, the iron wire H becomes magnetically saturated and incapable of carrying all the lines of force, and hence ceases to protect the cores C, which become magnetized, developing their maximum effect after an interval of time subsequent to the similar manifestation of strength in the other set of magnets, the extent of which is arbitrarily determined by the thickness of the shield H, and other well-understood conditions.

From the above it will be seen that the apparatus or device acts in two ways. First, by retarding the current, and, second, by retarding the magnetization of one set of the cores, from which its effectiveness will readily appear.

Many modifications of the principle of this invention are possible. One useful and efficient application of the invention is shown in Fig. 2. In said figure a motor is shown similar in all respects to that above described, except that the iron wire H, which is wrapped around the coils E, is in this case connected in series with the coils D. The iron-wire coils H, are connected and wound, so as to have little or no self-induction, and being added to the resistance of the circuit F the action of the current in that circuit will be accelerated, while in the other circuit G it will be retarded. The shield H may be made in many forms, as will be understood, and used in different ways, as appears from the foregoing description. I do not, however, limit myself to any specific form or arrangement; but

What I claim is—

1. In an alternating-current motor having two energizing-circuits, the combination, with the magnetic cores and coils of one of the circuits, of interposed magnetic shields or screens for retarding the magnetization of said cores, as set forth.

2. In an alternating-current motor having two energizing-circuits, the combination, with the magnetic cores and the coils of one of the circuits wound thereon, of magnetic shields or coils wound around said coils at right angles to their convolutions, as set forth.

3. In an alternating-current motor having two energizing-circuits, the combination, with the magnetic cores and the coils of one of the circuits which energize the said cores, of magnetic shields forming closed magnetic circuits around the coils and interposed between the coils and cores, as set forth.

4. In an alternating-current motor having two energizing-circuits derived from the same source, the combination, with the cores and the coils of one of the circuits that energizes the same, of insulated iron-wire coils wound on the said energizing-coils at right angles to their convolutions and connected up in series with the coils of the other energizing-circuit, as set forth.

NIKOLA TESLA.

Witnesses:
ROBT. F. GAYLORD,
PARKER W. PAGE.

179639B

(No Model.)

N. TESLA

ALTERNATING CURRENT MOTOR

No. 433,701 Patented August 5, 1890

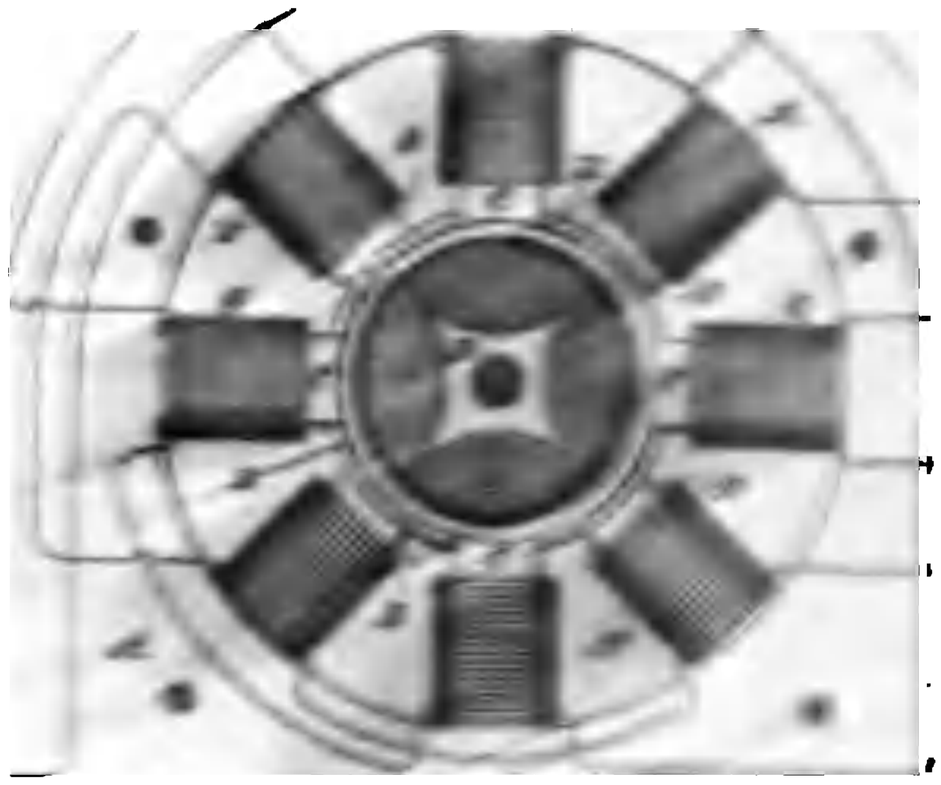

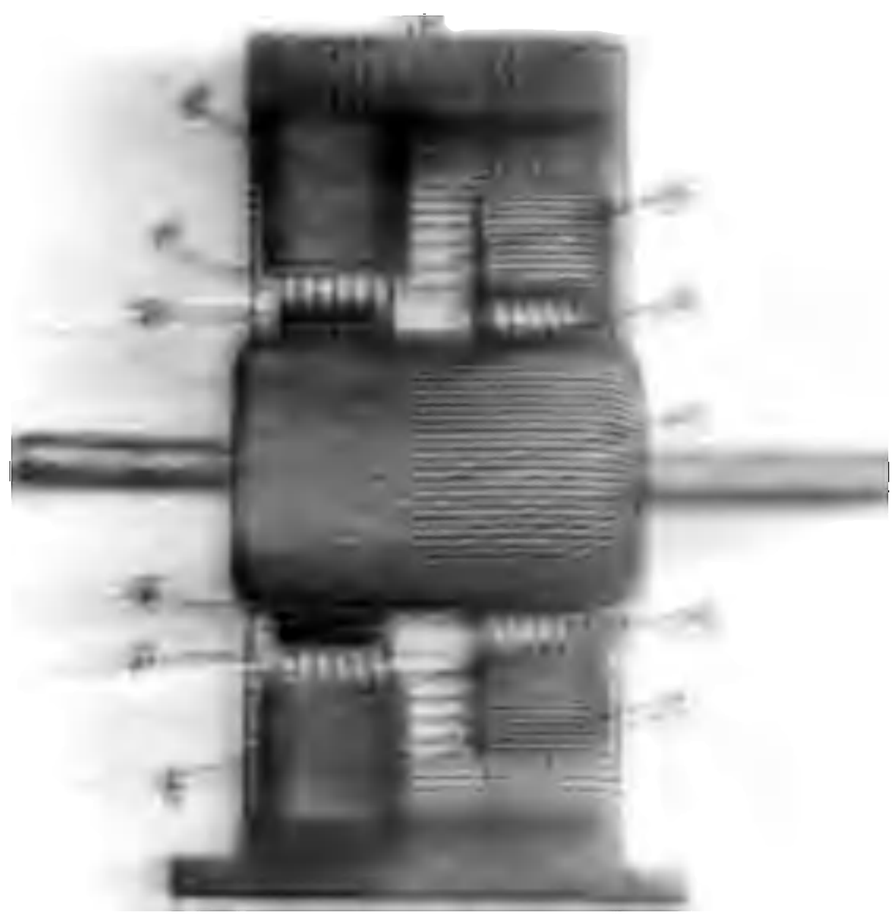

UNITED STATES PATENT OFFICE.

NIKOLA TESLA, OF NEW YORK, N. Y., ASSIGNOR TO THE TESLA ELECTRIC COMPANY, OF SAME PLACE.

ALTERNATING-CURRENT MOTOR.

SPECIFICATION forming part of Letters Patent No. 433,701, dated August 5, 1890

Application filed March 26, 1890. Serial No. 345,389. (No model.)

To all whom it may concern:

Be it known that I, NIKOLA TESLA, a subject of the Emperor of Austria-Hungary, from Smiljan, Lika, border country of Austria-Hungary, residing at New York, in the county and State of New York, have invented certain new and useful Improvements in Alternating-Current Motors, of which the following is a specification, reference being had to the drawings accompanying and forming a part of the same.

This invention relates to that class of alternating-current motors in which the field-magnets are energized by coils connected up in two circuits derived from the same source and having different degrees of self-induction, whereby the currents in one circuit or branch are retarded more than in the other, with the result of producing a progressive advance or rotation of the points of maximum magnetic effect in the field that maintains the armature in rotation. In motors of this kind I have employed, among other means, a self-induction coil in one circuit and a dead-resistance in the other, or I have secured the same result by the special character of the winding of the two circuits, and in still another instance I have so constructed the motor that the retarded-current coils were nearly inclosed by iron, whereby the self-induction of such coils was very greatly increased.

The invention subject of this application is an improvement on this last-named plan.

In carrying out the invention I construct a field-magnet having two sets of poles or inwardly-projecting cores and placed side by side, so as practically to form two fields of force and alternately disposed—that is to say, with the poles of one set or field opposite the spaces between the other. I then connect the free ends of one set of poles by means of laminated-iron bands or bridge-pieces of considerably smaller cross-section than the cores themselves, whereby the cores will all form parts of complete magnetic circuits. When the coils on each set of magnets are connected in multiple circuits or branches from a source of alternating currents, electromotive forces are set up in or impressed upon each circuit simultaneously; but the coils on the magnetically bridged or shunted cores will have, by reason of the closed magnetic circuits, a high self-induction, which retards the current, permitting at the beginning of each impulse but little current to pass. On the other hand, no such opposition being encountered in the other set of coils, the current passes freely through them, magnetizing the poles on which they are wound. As soon, however, as the laminated bridges become saturated and incapable of carrying all the lines of force, which the rising electro-motive force, and consequently increased current, produce, free poles are developed at the ends of the cores, which, acting in conjunction with the others, produce rotation of the armature.

The construction in detail by which this invention is illustrated is shown in the accompanying drawings.

Figure 1 is a view in side elevation of a motor embodying the invention. Fig. 2 is a vertical cross-section of the same.

A is the frame of the motor, which is preferably built up of sheets of iron punched out to the desired shape and bolted together with insulation of a proper character between the sheets. When complete, the frame makes a field-magnet with inwardly-projecting pole-pieces B and C. To adapt them to the requirements of this particular case these pole-pieces are out of line with one another, those marked B surrounding one end of the armature and the others, as C, the opposite end, and they are disposed alternately—that is to say, the pole-pieces of one set occur in line with the spaces between those of the other sets.

The armature D is of cylindrical form, and is also laminated in the usual way and is wound longitudinally with coils closed upon themselves. The pole-pieces C are connected or shunted by bridge-pieces E. These may be made independently and attached to the pole-pieces, or they may be parts of the forms or blanks stamped or punched out of sheet-iron. Their size or mass is determined by various conditions, such as the strength of the current to be employed, the mass or size of the cores to which they are appplied, and other well-understood conditions.

Coils F surround the pole-pieces B, and other coils G are wound on the pole-pieces C.

These coils are connected in series in two circuits, which are branches of a circuit from a generator of alternating currents, and they may be so wound, or the respective circuits in which they are included may be so arranged, that the circuit of coils G will have independently of the particular construction herein described a higher self-induction than the other circuit or branch.

The function of the shunts or bridges E is that they shall form with the cores C a closed magnetic circuit for a current up to a predetermined strength, so that when saturated by such current and unable to carry more lines of force than such a current produces they will to no further appreciable extent interfere with the development by a stronger current of free magnetic poles at the ends of the cores C.

In such a motor the current is so retarded in the coils G and the manifestation of the free magnetism in the poles C is delayed beyond the period of maximum magnetic effect in poles B that a strong torque is produced and the motor operates with approximately the power developed in a motor of this kind energized by independently-generated currents differing by a full-quarter phase.

What I claim in this application is—

1. In an alternating-current motor having two sets or series of pole-pieces, the combination, with one of such sets or series, of magnetic shunts or bridges connecting their free ends, as herein set forth.

2. In an alternating-current motor having two sets or series of pole-pieces energized by coils in independent circuits from the same source, the combination, with one of the sets or series of pole-pieces, of magnetic shunts or bridges connecting their free ends, as described.

3. In an alternating-current motor having a laminated or subdivided field-magnet provided with two sets or series of cores or pole-pieces, the combination, with such pole-pieces, of energizing-coils connected, respectively, in two circuits derived from the same source of alternating currents and laminated or subdivided iron shunts or bridges of smaller cross-section than the pole-pieces and joining the free ends of all the cores or pole-pieces of one set to form closed magnetic circuits, as set forth.

4. In an alternating-current motor, the combination, with a set or series of field-poles and energizing-coils wound thereon, of an intermediate set of pole-pieces forming portions of closed magnetic circuits and coils thereon in a circuit derived from the same source of alternating currents as the other, as set forth.

NIKOLA TESLA.

Witnesses:

ROBT. F. GAYLORD,

PARKER W. PAGE.

(No Model.)

N. TESLA.

ELECTRICAL TRANSFORMER OR INDUCTION DEVICE.

No. 433,702. Patented Aug. 5, 1890.

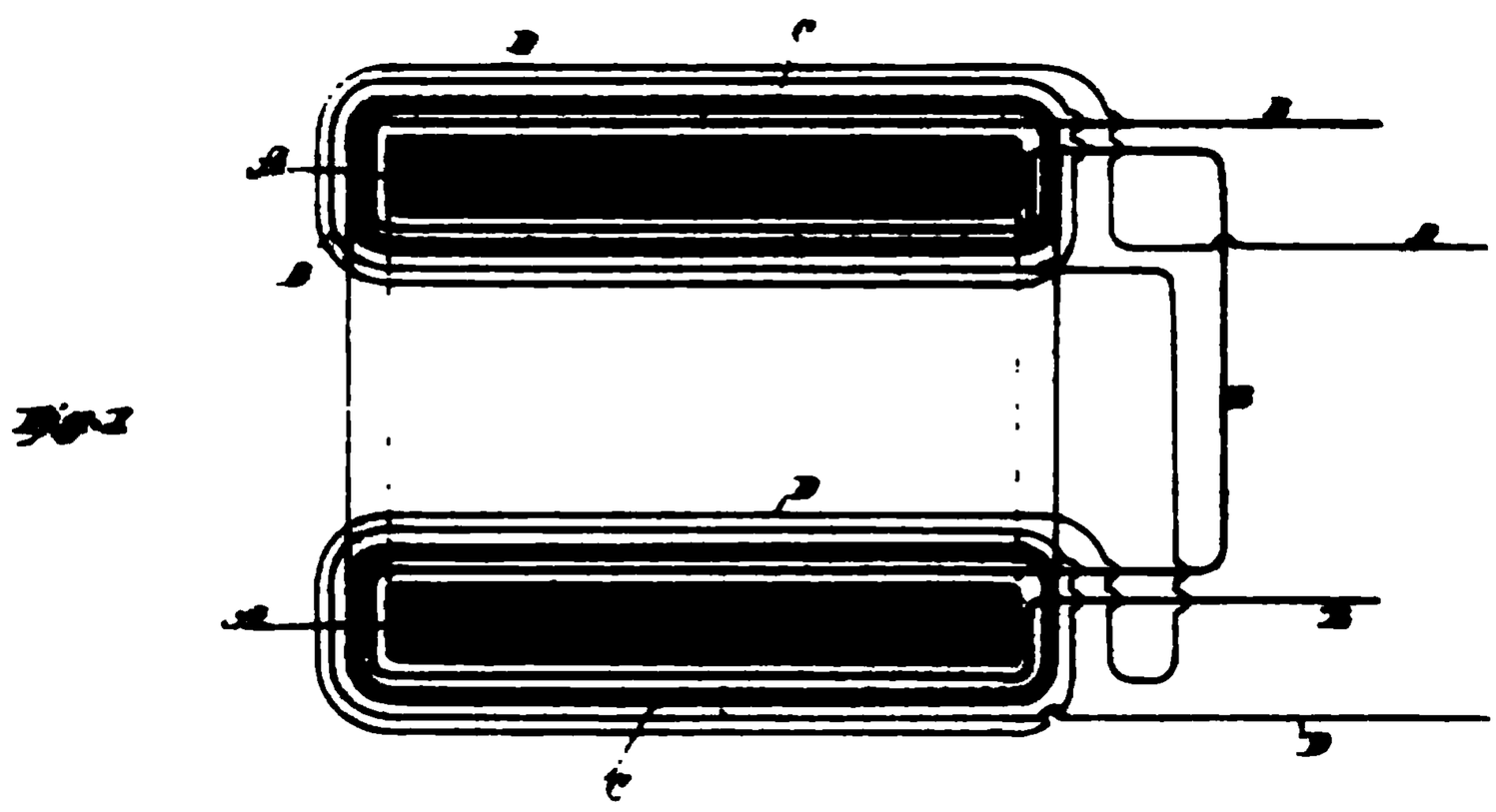

Fig. 2

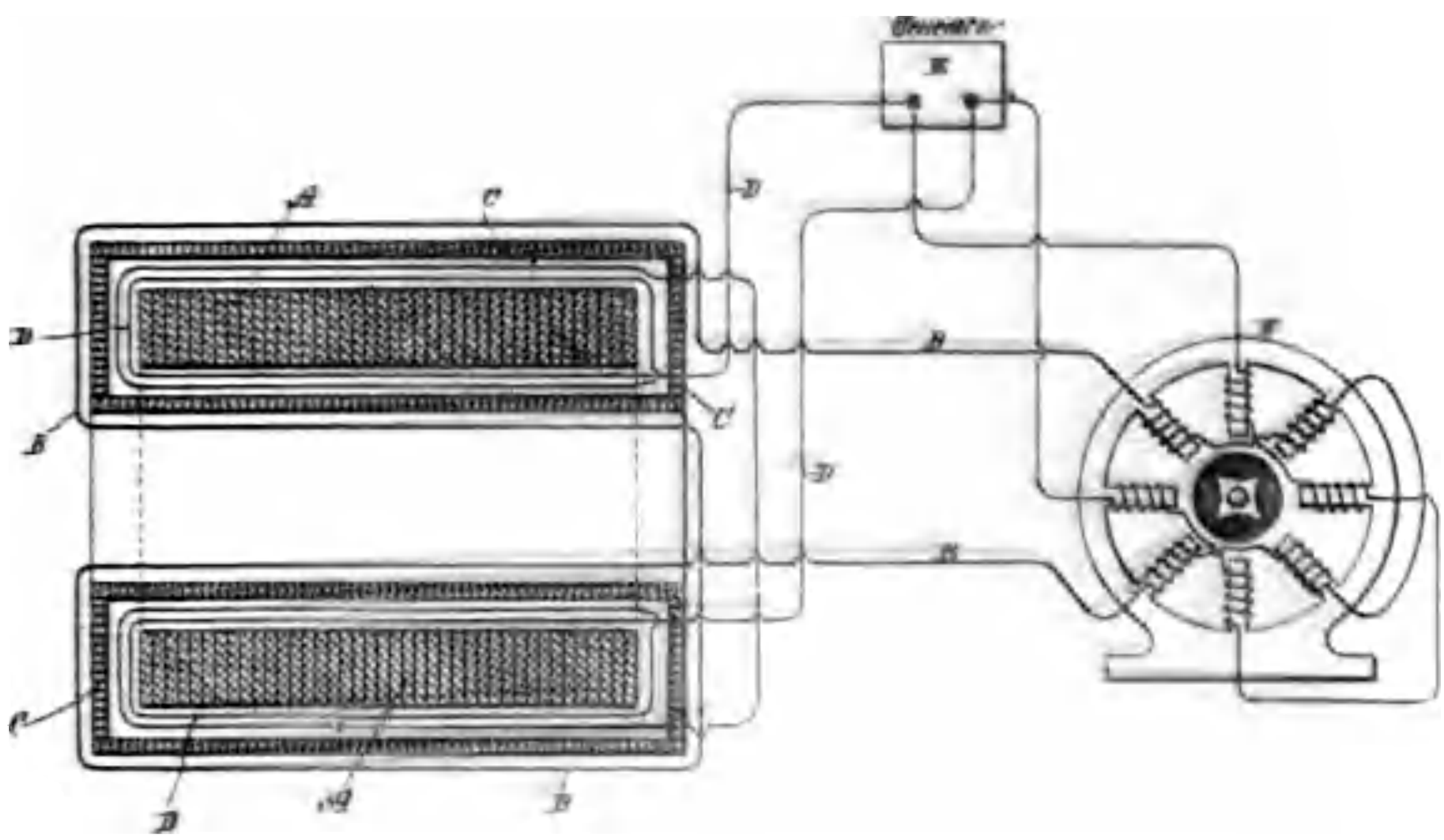

Witnesses:
Raphael Netter
Emil Hirschfeld

Inventor
Nikola Tesla
by
Chas. Curtis & Page
Attorneys

UNITED STATES PATENT OFFICE.

NIKOLA TESLA, OF NEW YORK, N. Y., ASSIGNOR TO THE TESLA ELECTRIC COMPANY, OF SAME PLACE.

ELECTRICAL TRANSFORMER OR INDUCTION DEVICE.

SPECIFICATION forming part of Letters Patent No. 433,702, dated August 5, 1890.

Application filed March 26, 1890. Serial No. 345,390. (No model.)

To all whom it may concern:

Be it known that I, NIKOLA TESLA, a subject of the Emperor of Austria-Hungary, from Smiljan, Lika, border country of Austria-Hungary, residing at New York, in the county and State of New York, have invented certain new and useful Improvements in Electrical Transformers or Induction Devices, of which the following is a specification, reference being had to the drawings accompanying and forming a part of the same.

This invention is an improvement in electrical transformers or converters, and has for its main objects the provision of means for securing, first, a phase difference between the primary and secondary currents adapted to the operation of my alternating-current motors and other like purposes, and, second, a constant current for all loads imposed upon the secondary.

In transformers as constructed now and heretofore it will be found that the electromotive force of the secondary very nearly coincides with that of the primary, being, however, of opposite sign. At the same time the currents, both primary and secondary, lag behind their respective electro-motive forces; but as this lag is practically or nearly the same in the case of each it follows that the maximum and minimum of the primary and secondary currents will nearly coincide, but differ in sign or direction, provided the secondary be not loaded or if it contain devices having the property of self-induction. On the other hand, the lag of the primary behind the impressed electro-motive force may be diminished by loading the secondary with a non-inductive or dead resistance—such as incandescent lamps—whereby the time interval between the maximum or the minimum periods of the primary and secondary currents is increased. This time interval, however, is limited, and the results obtained by phase difference in the operation of such devices as my alternating-current motors can only be approximately realized by such means of producing or securing this difference, as above indicated, for it is desirable in such cases that there should exist between the primary and secondary currents, or those which, however produced, pass through the two circuits of the motor, a difference of phase of ninety degrees; or, in other words, the current in one circuit should be maximum when that in the other circuit is minimum. To more perfectly attain to this condition I obtain or secure an increased retardation of the secondary current in the following manner: Instead of bringing the primary and secondary coils or circuits of a transformer into the closest possible relations, as has hitherto been done, I protect in a measure the secondary from the inductive action or effect of the primary by surrounding either the primary or the secondary with a comparatively-thin magnetic shield or screen. Under these conditions or circumstances, as long as the primary current has a small value, the shield protects the secondary; but as soon as the primary current has reached a certain strength, which is arbitrarily determined, the protecting magnetic shield becomes saturated and the inductive action upon the secondary begins. It results, therefore, that the secondary current begins to flow at a certain fraction of a period later than it would without the interposed shield, and since this retardation may be obtained without necessarily retarding the primary current also, an additional lag is secured, and the time interval between the maximum or minimum periods of the primary and secondary currents is increased. I have further discovered that such a transformer may, by properly proportioning its several elements and determining in a manner well understood the proper relations between the primary and secondary windings, the thickness of the magnetic shield, and other conditions, be constructed to yield a constant current at all loads. No precise rules can be given for the specific construction and proportions for securing the best results, as this is a matter determined by experiment and calculation in particular cases; but the general plan of construction which I have described will be found under all conditions to conduce to the attainment of this result.

In the accompanying drawings I have illustrated the construction above set forth.

Figure 1 is a cross-section of a transformer embodying my improvement. Fig. 2 is a simi-

lar view of a modified form of transformer, showing diagrammatically the manner of using the same.

A A is the main core of the transformer, composed of a ring of soft annealed and insulated or oxidized iron wire. Upon this core is wound the secondary circuit or coil B B. This latter is then covered with a layer or layers of annealed and insulated iron wires C C, wound in a direction at right angles to said secondary coil. Over the whole is then wound the primary coil or wire D D. From the nature of this construction it will soon be obvious that as long as the shield formed by the wires C is below magnetic saturation the secondary coil or circuit is effectually protected or shielded from the inductive influence of the primary, although I would state that on open circuit it may exhibit some electro-motive force. When the strength of the primary reaches a certain value, the shield C, becoming saturated, ceases to protect the secondary from inductive action, and current is in consequence developed therein. For similar reasons, when the primary current weakens, the weakening of the secondary is retarded to the same or approximately the same extent.

The specific construction of the transformer is largely immaterial. In Fig. 2, for example, the core A is built up of thin insulated iron plates or disks. The primary circuit D is wound next the core A. Over this is applied the shield C, which in this case is made up of thin strips or plates of iron properly insulated and surrounding the primary, forming a closed magnetic circuit. The secondary B is wound over the shield C. In Fig. 2, also, E is a source of alternating or rapidly changing currents. The primary of the transformer is connected with the circuit of the generator.

F is a two-circuit alternating-current motor, one of the circuits being connected with the main circuit from the source E, and the other being supplied with currents from the secondary of the transformer.

Having now described my invention, what I claim is—

1. In an electrical transformer or induction device, the combination, with the main magnetic core and the primary and secondary coils or circuits, of a magnetic shield or screen interposed between said coils, as herein set forth.

2. In an electrical transformer or inductive device, the combination, with the magnetic core and the primary and secondary coils or circuits, of a magnetic shield or screen surrounding one of said coils only, as set forth.

3. In an electrical transformer or induction device, the combination, with the magnetic core and the primary and secondary coils wound thereon, of a magnetic shield or screen wound on or built up around one only of said coils, as described.

4. In an electrical transformer or induction device, the combination, with a main laminated magnetic core and primary and secondary coils thereon, of a subdivided or laminated magnetic shield or screen interposed between the coils, as set forth.

5. In an electrical transformer, the combination, with a magnetic core and primary and secondary coils wound thereon, of a magnetic shield or screen interposed between said coils and surrounding one of them and adapted to be or capable of being magnetically saturated by a predetermined current strength below the maximum in the primary, as set forth.

NIKOLA TESLA.

Witnesses:
ROBT. F. GAYLORD,
PARKER W. PAGE.

(No Model.)

N. TESLA.

ELECTRO MAGNETIC MOTOR.

No. 433,703. Patented Aug. 5, 1890.

Fig. 1

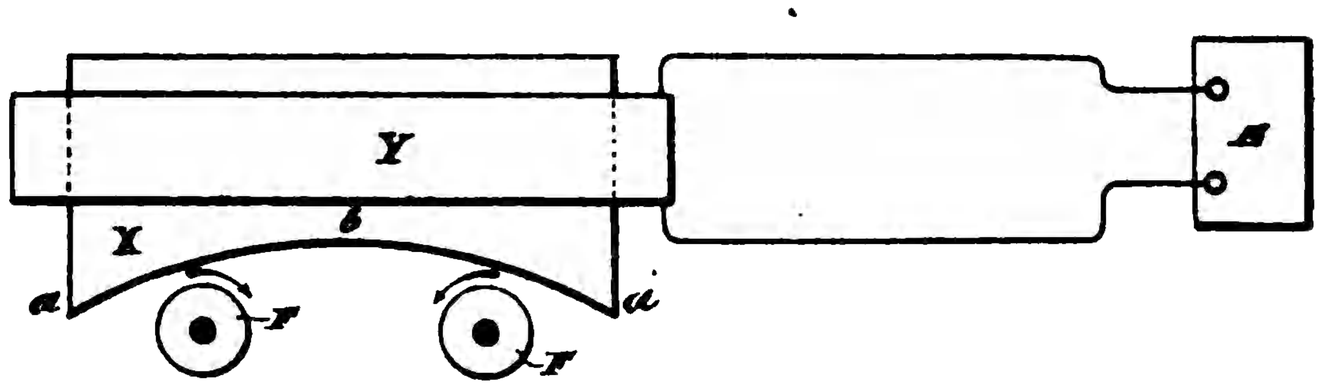

Fig. 2

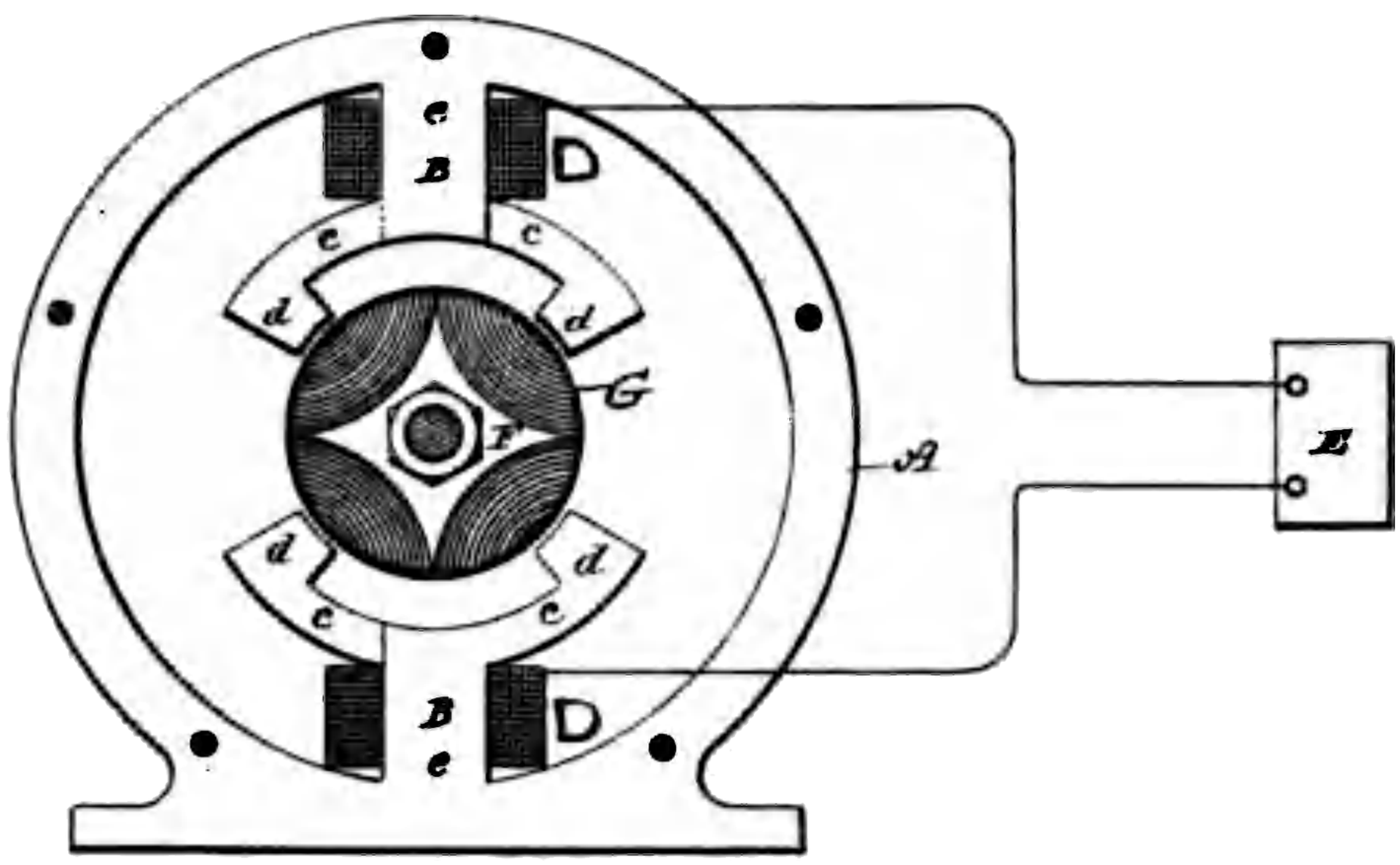

Fig. 3

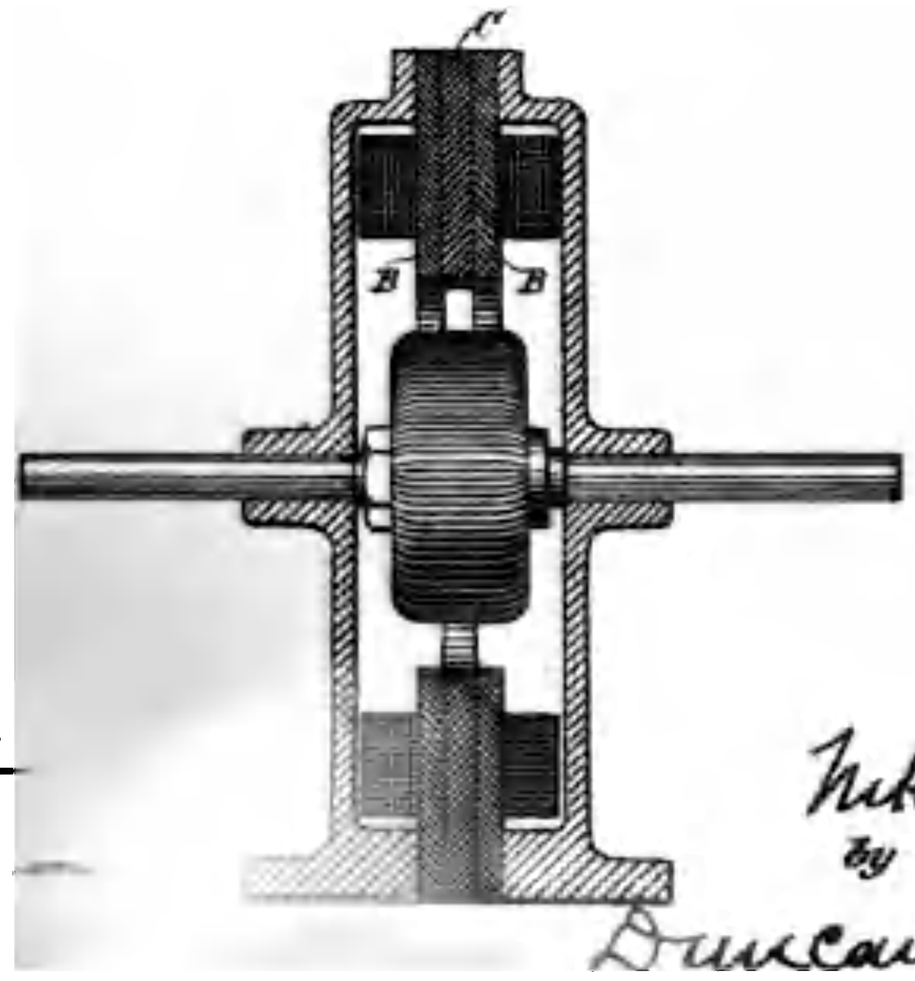

Witnesses:
Raphael Netter
Ernest Duncan.

Inventor:
Nikola Tesla
by
Curtis & Ha
Attorneys.

UNITED STATES PATENT OFFICE.

NIKOLA TESLA, OF NEW YORK, N. Y., ASSIGNOR TO THE TESLA ELECTRIC COMPANY, OF SAME PLACE.

ELECTRO-MAGNETIC MOTOR.

SPECIFICATION forming part of Letters Patent No. 433,703, dated August 5, 1890.

Application filed April 4, 1890. Serial No. 346,603. (No model.)

To all whom it may concern:

Be it known that I, NIKOLA TESLA, a subject of the Emperor of Austria-Hungary, from Smiljan, Lika, border country of Austria-Hungary, residing at New York, in the county and State of New York, have invented certain new and useful Improvements in Electro-Magnetic Motors, of which the following is a specification, reference being had to the drawings accompanying and forming a part of the same.

This invention is an improvement in alternating-current motors, and has for its general object to produce a single-circuit alternating-current torque-motor of economical and simple construction.

The nature of the invention will be understood from the following statement.

It is well known that if a magnetic core, even if laminated or subdivided, be wound with an insulated coil and a current of electricity directed through the coil the magnetization of the entire core does not immediately ensue, the magnetizing effect not being exhibited in all parts simultaneously. This I attribute to the fact that the action of the current is to energize first those laminæ or parts of the core nearest the surface and adjacent to the exciting-coil, and from thence the action progresses toward the interior. A certain interval of time therefore elapses between the manifestation of magnetism in the external and the internal sections or layers of the core. If the core be thin or of small mass, this effect may be inappreciable; but in the case of a thick core, or even of a comparatively thin one, if the number of alternation or rate of change of the current strength be very great the time interval occurring between the manifestations of magnetism in the interior of the core and in those parts adjacent to the coil is more marked, and in the construction of such apparatus as motors which are designed to be run by alternating or equivalent currents—such as pulsating or undulating currents generally—I have found it desirable and even necessary to give due consideration to this phenomenon and to make special provisions in order to obviate its consequences. The specific object of my present invention is to take advantage of this action or effect, and by rendering it more pronounced to utilize it in the operation of motors in general. This object I attain by constructing a field-magnet in which the parts of the core or cores that exhibit at different intervals of time the magnetic effect imparted to them by alternating or equivalent currents in an energizing coil or coils are so placed with relation to a rotating armature as to exert thereon their attractive effect successively in the order of their magnetization. By this means I secure a similar result to that which I have heretofore attained in other forms or types of motor in which by means of one or more alternating currents I have produced a rotation or progression of the magnetic poles or points of maximum attraction of the field of force.

In the drawings I have shown a simple form of motor, which will serve to demonstrate the principle of the mode of operation, which I have above described in general terms.

Figure 1 is a side elevation of such motor. Fig. 2 is a side elevation of a more practicable and efficient embodiment of the invention. Fig. 3 is a central vertical section of the same in the plane of the axis of rotation.

Referring to Fig. 1, let X represent a large iron core, which may be composed of a number of sheets or laminæ of soft iron or steel. Surrounding this core is a coil Y, which is connected with a source E of rapidly-varying currents. Let us consider now the magnetic conditions existing in this core at any point, as *b*, at or near the center, and any other point, as *a*, nearer the surface. When a current-impulse is started in the magnetizing-coil Y, the section or part at *a*, being close to the coil, is immediately energized, while the section or part at *b*, which, to use a convenient expression, is "protected" by the intervening sections or layers between *a* and *b*, does not at once exhibit its magnetism. However, as the magnetization of *a* increases, *b* becomes also affected, reaching finally its maximum strength some time later than *a*. Upon the weakening of the current the magnetization of *a* first diminishes, while *b* still exhibits its maximum strength; but the continued weakening of *a* is attended by a subsequent weakening of *b*. Assuming the cur-

rent to be an alternating one, *a* will now be reversed, while *b* still continues of the first-imparted polarity. This action continues the magnetic condition of *b*, following that of *a* in the manner above described. If an armature—for instance, a simple disk F, mounted to rotate freely on an axis—be brought into proximity to the core, a movement of rotation will be imparted to the disk, the direction depending upon its position relatively to the core, the tendency being to turn the portion of the disk nearest to the core from *a* to *b*, as indicated in Fig. 1. This action or principle of operation I have embodied in a practicable form of motor, which is illustrated in Fig. 2. Let A in said figure represent a circular frame of iron, from diametrically-opposite points of the interior of which the cores project. Each core is composed of three main parts B, B, and C, and they are similarly formed with a straight portion or body *e*, around which the energizing-coil is wound, a curved arm or extension *c*, and an inwardly-projecting pole or end *d*. Each core is made up of two parts B B, with their polar extensions reaching in one direction and a part C between the other two and with its polar extension reaching in the opposite direction. In order to lessen in the cores the circulation of currents induced therein, the several sections are insulated from one another in the manner usually followed in such cases. These cores are wound with coils D, which are connected in the same circuit, either in parallel or series, and supplied with an alternating or a pulsating current, preferably the former, by a generator E, represented diagrammatically. Between the cores or their polar extensions is mounted a cylindrical or similar armature F, wound with magnetizing-coils G, that are closed upon themselves, as is usual in motors of this general class.

The operation of this motor is as follows: When a current impulse or alternation is directed through the coils D, the sections B B of the cores, being on the surface and in close proximity to the coils, are immediately energized. The sections C, on the other hand, are protected from the magnetizing influence of the coil by the interposed layers of iron B B. As the magnetism of B B increases, however, the sections C are also energized; but they do not attain their maximum strength until a certain time subsequent to the exhibition by the sections B B of their maximum. Upon the weakening of the current the magnetic strength of B B first diminishes, while the sections C have still their maximum strength; but as B B continue to weaken the interior sections are similarly weakened. B B may then begin to exhibit an opposite polarity, which is followed later by a similar change on C, and this action continues. B B and C may therefore be considered as separate field-magnets, being extended so as to act on the armature in the most efficient positions, and the effect is similar to that in my other forms of motor—viz., a rotation or progression of the maximum points of the field of force. Any armature—such, for instance, as a disk—mounted in this field would rotate from the pole first to exhibit its magnetism to that which exhibits it later.

It is evident that the principle herein described may be carried out in conjunction with other means, such as I have elsewhere set forth, for securing a more favorable or efficient action of the motor. For example, the polar extensions of the sections C may be wound or surrounded by closed coils L, as indicated by dotted lines in Fig. 2. The effect of these coils will be to still more effectively retard the magnetization of the polar extensions of C.

I do not wish to be understood as limiting myself to any particular construction of this form of motor, as the same principle of action or operation may be carried out in a great variety of forms.

What I claim is—

1. In an alternating-current motor, the combination, with an energizing-coil and a core composed of two parts, one protected from magnetization by the other interposed between it and the coil, of an armature mounted with the influence of the fields of force produced by said parts, as set forth.

2. The combination, in an alternating-current motor, of a rotating armature, a field-magnet composed of a coil and a core with two sections in proximity to the coil and an inner section between the same, the sections being formed or provided with polar projections extending in opposite directions over or around the armature, as set forth.

3. The combination, in an alternating-current motor, of a rotating armature, a frame and field-magnets thereon, each composed of an energizing-coil wound around a core made up of outer and inner or protected magnetic sections, each of which is formed or provided with independent laterally-extended pole pieces or projections, as herein described.

NIKOLA TESLA.

Witnesses:
ROBT. F. GAYLORD,
PARKER W. PAGE.

(No Model.)

N. TESLA.

ELECTRO MAGNETIC MOTOR.

No. 445,207. Patented Jan. 27, 1891.

Fig. 1

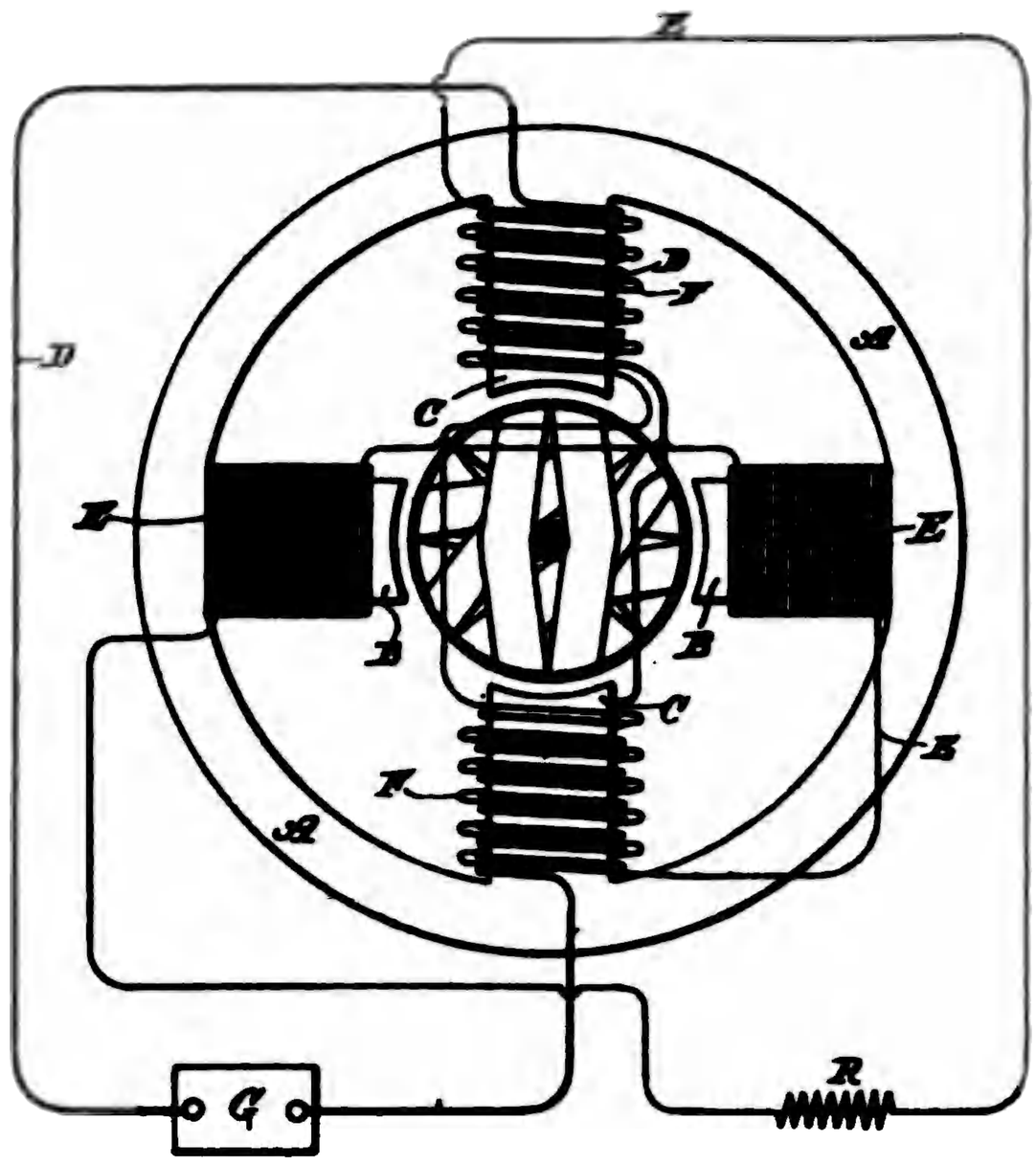

Fig. 2

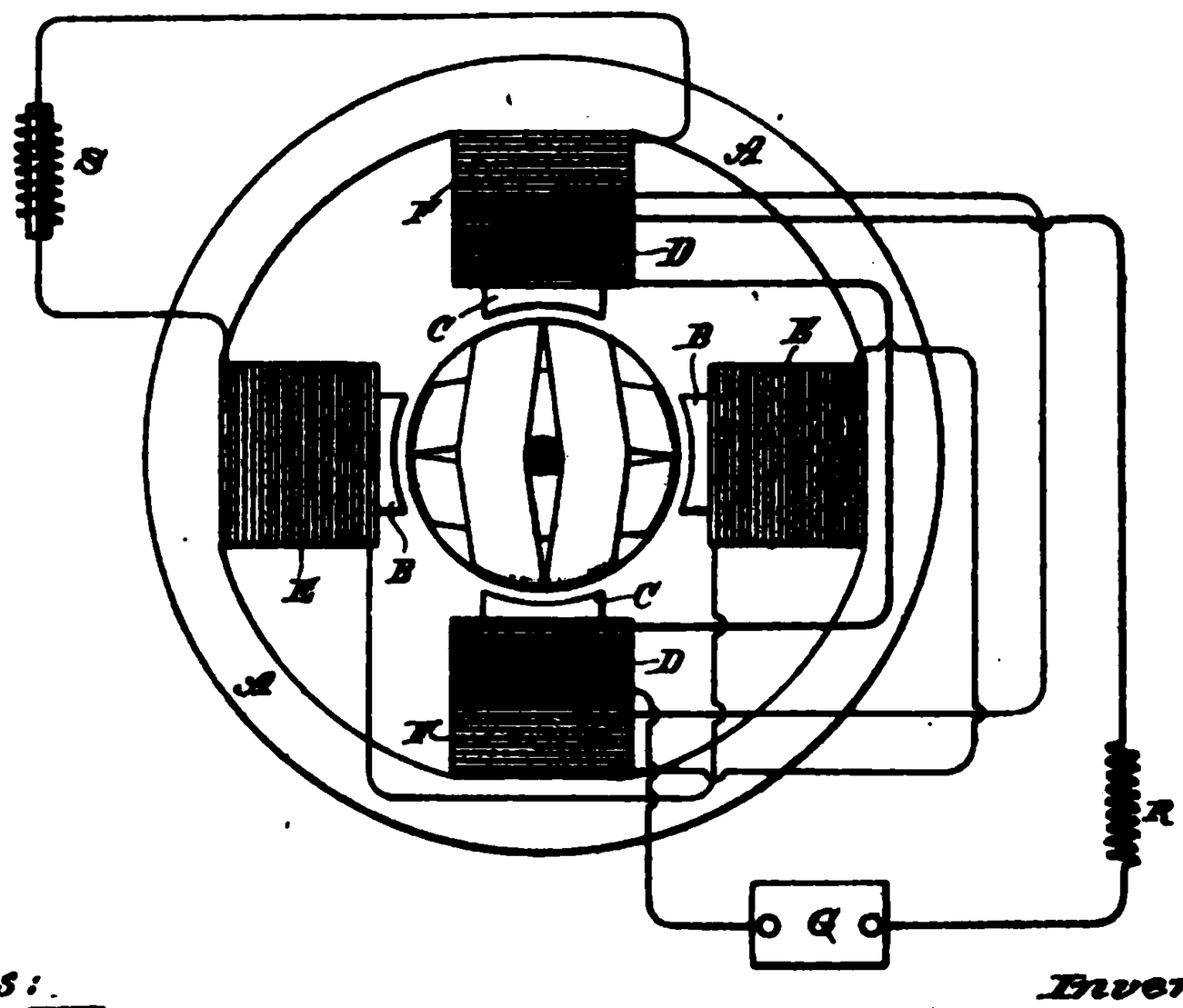

Witnesses:
Raphael Netter
Frank R. Hartley

Inventor
Nikola Tesla
By
Duncan, Curtis & Page.
Attorneys.

UNITED STATES PATENT OFFICE.

NIKOLA TESLA, OF NEW YORK, N. Y., ASSIGNOR TO THE TESLA ELECTRIC COMPANY, OF SAME PLACE.

ELECTRO-MAGNETIC MOTOR.

SPECIFICATION forming part of Letters Patent No. 445,207, dated January 27, 1891.

Application filed May 20, 1889. Serial No. 311,417. (No model.)

To all whom it may concern:

Be it known that I, NIKOLA TESLA, a subject of the Emperor of Austria-Hungary, from Smiljan, Lika, border country of Austria-Hungary, residing at New York, in the county and State of New York, have invented certain new and useful Improvements in Electro-Magnetic Motors, of which the following is a specification, reference being had to the drawings accompanying and forming a part of the same.

Among the various forms of alternating-current motors invented by me is one which I have described in other applications, and which is constructed as follows: I build a field-core with, say, four poles, between which is mounted an armature that is generally wound with closed coils. On two of the opposite poles of the field I wind primary coils, which are connected up in the main circuit. On the same cores I also wind secondary coils, which are closed through coils on the other pair or set of poles. In this motor when an alternating current is caused to pass through the primary coils it energizes directly one set of poles and induces currents in the secondary coils, which act to energize the other poles; but the phases of the current in the secondary coils may differ in time from those of the primary current, and hence a rotation or shifting of the poles is effected that imparts rotation to the motor.

These motors may be constructed in many other ways; but for purposes of this case it is only necessary to consider the specific form which I have thus generally described, as my improvements relate mainly to such form.

The object of my present invention is to render this form of motor more efficient and to improve its action or mode of operation.

In the motors constructed in accordance with this principle I bring two energizing-circuits into inductive relation in the motor itself—that is to say, the secondary currents which energize one set of the field-cores are induced in the motor itself, and the employment of an external induction device is thus avoided. The operation of these motors, however, is dependent upon the existence of a certain difference of phase between the currents in the primary and secondary coils. To obtain a difference of phase or lag that is suited to working conditions is the specific object of my present invention.

The following explanations will serve to illustrate the principle upon which said invention is based. Let it be assumed that an ordinary alternating-current generator is connected up in a circuit of practically no self-induction, such, for example, as a circuit containing incandescent lamps only. On the operation of the machine alternating currents will be developed in the circuit, and the phases of these currents will theoretically coincide with the phases of the impressed electro-motive force. Such currents may be regarded and designated as the "unretarded currents."

It will be understood, of course, that in practice there is always more or less self-induction in the circuit, which modifies to a corresponding extent these conditions; but for convenience this may be disregarded in the consideration of the principle of operation, since the same laws apply. Assume next that a path of currents be formed across any two points of the above circuit, consisting, for example, of the primary of an induction device. The phases of the currents passing through the primary, owing to the self-induction of the same, will not coincide with the phases of the impressed electro-motive force, but will lag behind the same, such lag being directly proportional to the self-induction and inversely proportional to the resistance of the said coil. The insertion of this coil will also cause a lagging or retardation of the currents traversing and delivered by the generator behind the impressed electro-motive force, such lag being the mean or resultant of the lag of the current through the primary alone and that of what I have designated the "unretarded current" in the entire working-circuit. Next consider the conditions imposed by the association in inductive relation with the primary coil of a secondary coil. The current generated in the secondary coil will react upon the primary current, modifying the retardation of the same, according to the amount of self-induction and resistance in the secondary circuit. If the secondary circuit have but little self-induction—as, for instance, when it contains incandescent lamps only—it will increase the

No Model.

N. TESLA

ELECTRO MAGNETIC MOTOR.

No. 455,067. Patented June 30, 1891.

Fig. 1

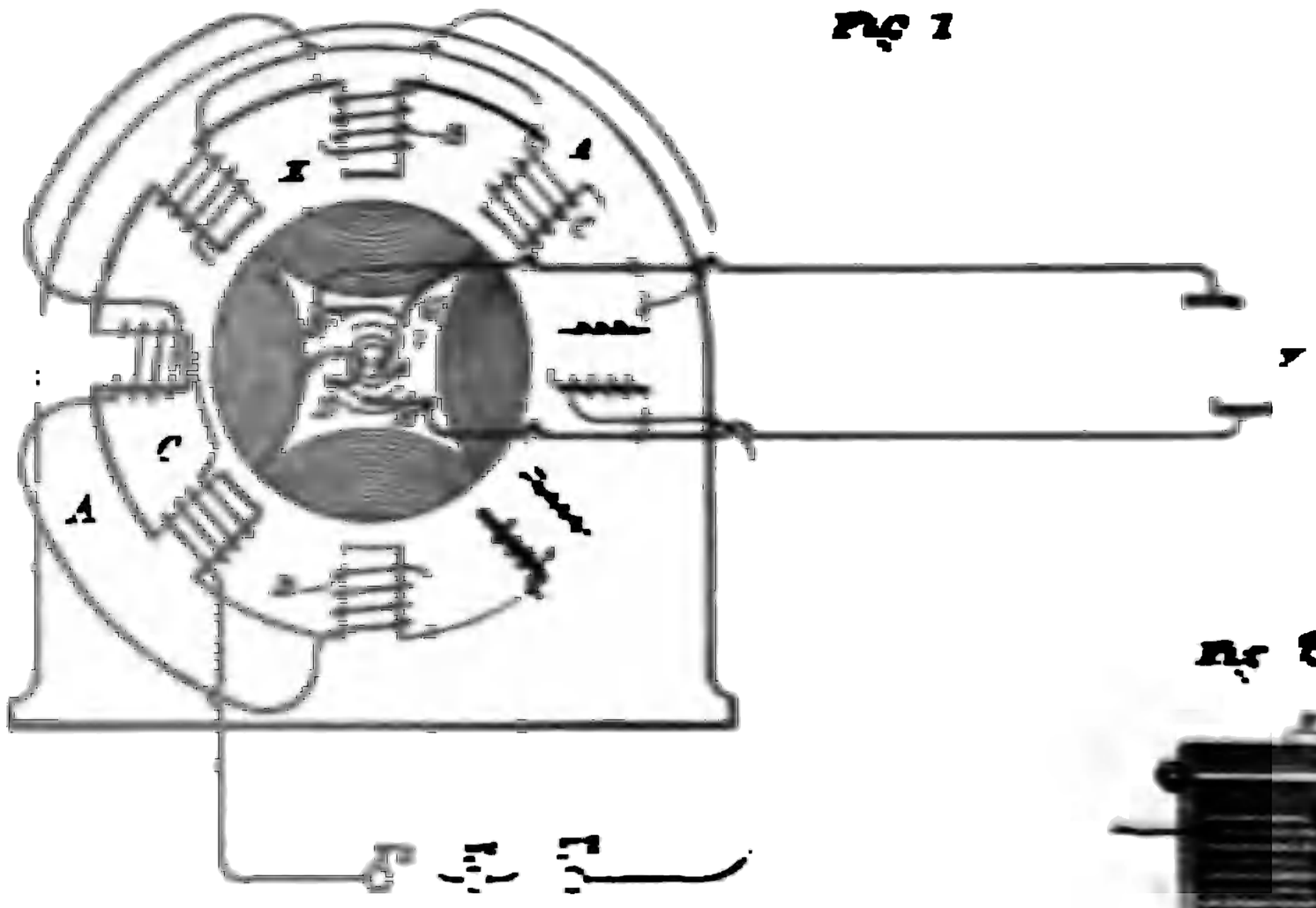

Fig. 2

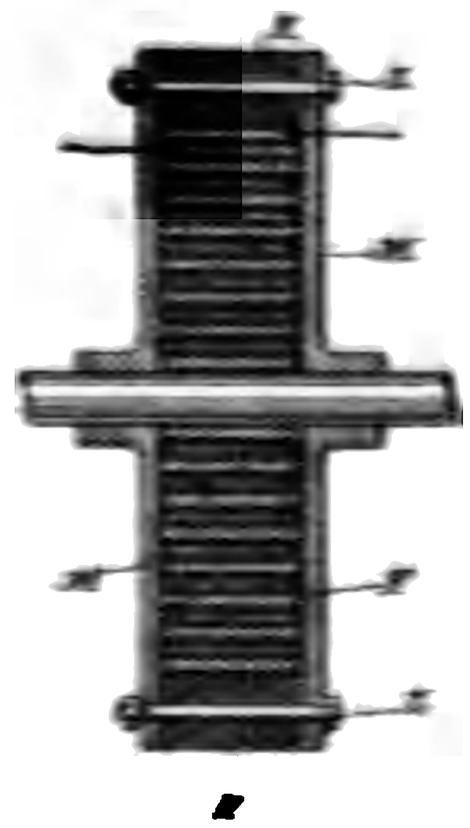

Fig. 3

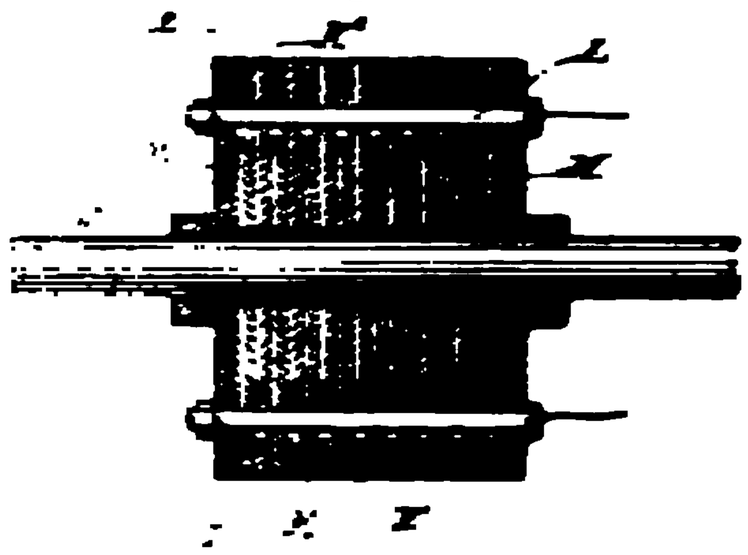

Fig. 5

Inventor
Nikola Tesla
by
Duncan & Page.
Attorneys

(No Model.)

N. TESLA.

ELECTRO MAGNETIC MOTOR.

No. 455,067. Patented June 30, 1891.

Fig. 1

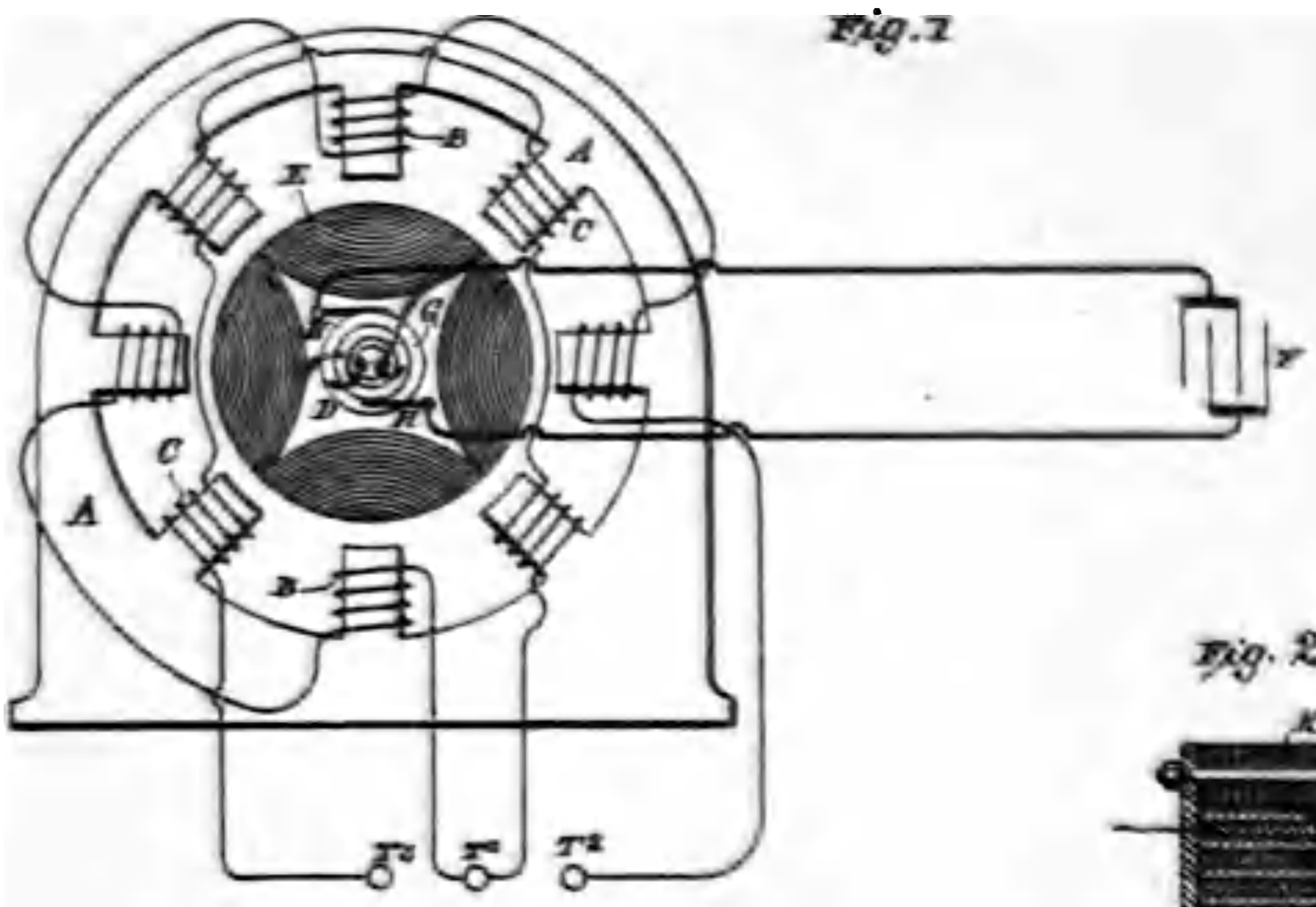

Fig. 2

Fig. 4

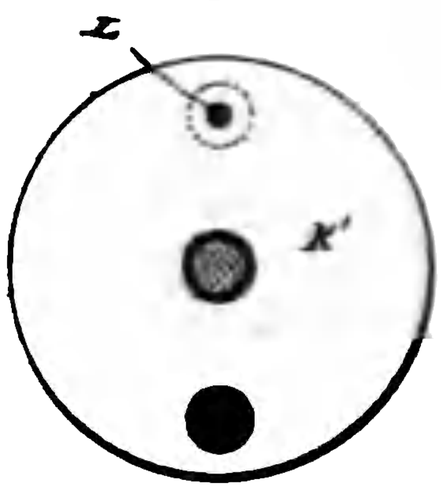

Fig. 3

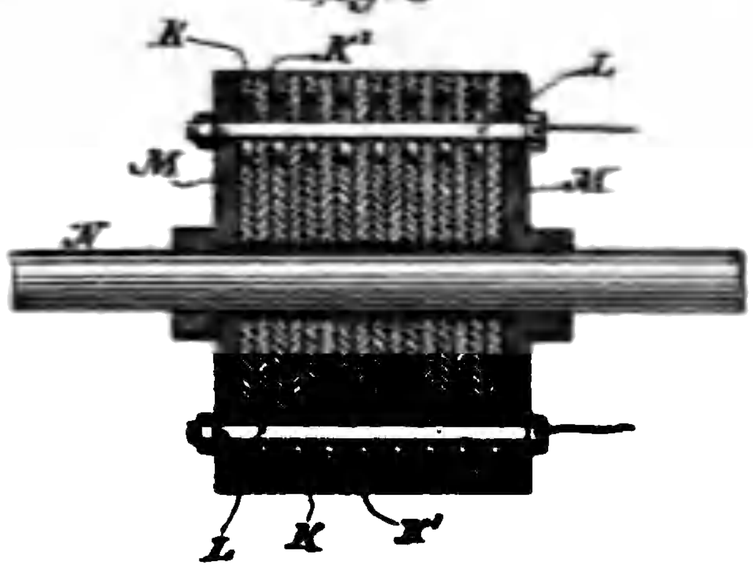

Fig. 5

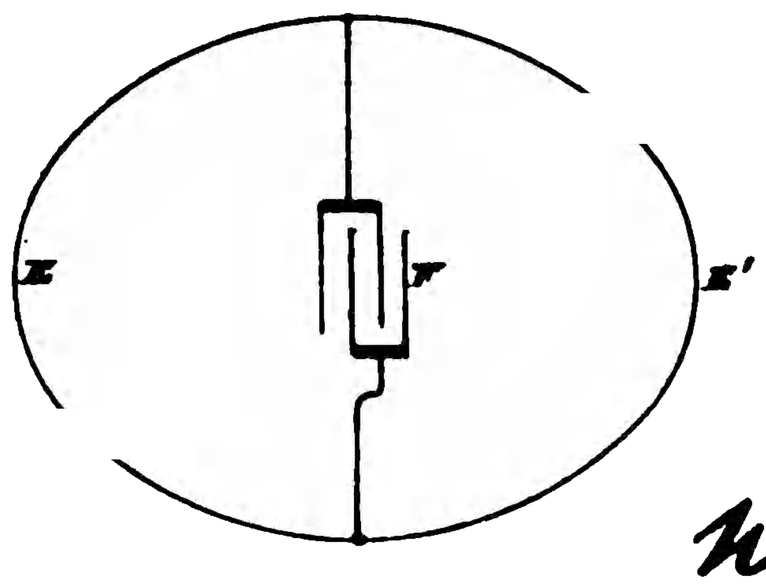

Witnesses
Raphael Netter
Frank B. Murphy.

Inventor
Nikola Tesla
by
Duncan & Page.
Attorneys.

UNITED STATES PATENT OFFICE.

NIKOLA TESLA, OF NEW YORK, N. Y.

ELECTRO-MAGNETIC MOTOR.

SPECIFICATION forming part of Letters Patent No. 455,067, dated June 30, 1891.

Application filed January 27, 1891. Serial No. 379,251. No model.

To all whom it may concern:

Be it known that I, NIKOLA TESLA, a subject of the Emperor of Austria, from Smiljan, Lika, border country of Austria-Hungary, and residing at New York, in the county and State of New York, have invented certain new and useful Improvements in Electro-Magnetic Motors, of which the following is a specification, reference being had to the accompanying drawings.

The subject of my present invention is an improvement primarily designed for application to alternating-current motors of the special type invented by me, and of which the operation is due to the action of alternating currents differing in phase and directed through or developed in independent energizing-circuits in the motor, and causing a shifting or rotation of the magnetic poles or their resultant attractive forces upon the rotating element or armature.

My improvements are based upon certain laws governing the action or effects produced by a condenser when connected to an electric circuit through which an alternating or in general an undulating current is made to pass. Some of these effects, and those most important in connection with my invention, are as follows: First, if the terminals or plates of a condenser be connected with two points of a circuit, the potentials of which are made to rise and fall in rapid succession, the condenser allows the passage or, more strictly speaking, the transferrence of a current, although its plates or armatures may be so carefully insulated as to prevent almost completely the passage of a current of unvarying strength or direction and of moderate electro-motive force; second, if a circuit the terminals of which are connected with the plates of the condenser possess a certain self-induction, the condenser will overcome or counteract to a greater or less degree, dependent upon well-understood conditions, the effects of such self-induc[illegible] third, if two points of [illegible] closed circuit throu[illegible] ap[illegible] falling [illegible] by a [illegible] the [illegible] fer[illegible] [illegible] s pro- [illegible] and ap- [illegible] ruction and operation of my motors, as by producing a difference in phase in the two energizing-circuits of an alternating-current motor by connecting the two circuits in derivation and connecting up a condenser in series in one of the circuits; but such applications seem to be obvious to one familiar with my motors and the facts above enumerated.

My present improvements, however, possess certain novel features of practical value and involve a knowledge of facts less generally known. These improvements comprise the use of a condenser or condensers in connection with the induced or armature circuit of a motor and certain details of the construction of such motors. In an alternating-current motor of the type to which I have particularly referred above, or in any other which has an armature coil or circuit closed upon itself, the latter represents not only an inductive resistance, but one which is periodically varying in value, both of which facts complicate and render difficult the attainment of the conditions best suited to the most efficient working of the motors. The most efficient working conditions, in other words, require, first, that for a given inductive effect upon the armature there should be the greatest possible current through the armature or induced coils, and, second, that there should always exist between the currents in the energizing and the induced circuits a given relation of phase. Hence whatever tends to decrease the self-induction and increase the current in the induced circuits will, other things being equal, increase the output and efficiency of the motor, and the same will be true of causes that operate to maintain the mutual attractive effect between the field-magnets and armature at its maximum. I secure these results by connecting with the induced circuit or circuits a condenser, in the manner hereinafter described, and I also, with this purpose in view, construct the mo[illegible] in a special manner.

Referring to the drawings for a particular description of the invention, Figure 1 is a [illegible] diagrammatic, of an alternating-curr[illegible] to which my present invention is a[illegible] Fig. 2 is a central section, in line wi[illegible] shaft, of a special form of armature-[illegible] adapted to the invention. Fig. 3 is a

similar section of a modification of the same. Fig. 4 is one of the sections of the core detached. Fig. 5 is a diagram showing a modified disposition of armature or induced circuits.

The general plan of the invention is illustrated in Fig. 1. A A in this figure represent the frame and field-magnets of an alternating-current motor, the poles or projections of which are wound with coils B and C, forming independent energizing-circuits connected either to the same or to independent sources of alternating currents, as is now well understood, so that the currents flowing through the circuits, respectively, will have a difference of phase. Within the influence of this field is an armature-core D, wound with coils E. In my motors of this description heretofore these coils have been closed upon themselves, or connected in a closed series; but in the present case each coil or the connected series of coils terminates in the opposite plates of a condenser F. For this purpose the ends of the series of coils are brought out through the shaft to collecting-rings G, which are connected to the condenser by contact-brushes H and suitable conductors, the condenser being independent of the machine. The armature-coils are wound or connected in such manner that adjacent coils produce opposite poles.

The action of this motor and the effect of the plan followed in its construction are as follows: The motor being started in operation and the coils of the field-magnets being traversed by alternating currents, currents are induced in the armature-coils by one set of field-coils, as B, and the poles thus established are acted upon by the other set, as C. The armature-coils, however, have necessarily a high self-induction, which opposes the flow of the currents thus set up. The condenser F not only permits the passage or transferrence of these currents, but also counteracts the effects of self-induction, and by a proper adjustment of the capacity of the condenser, the self-induction of the coils, and the periods of the currents the condenser may be made to overcome entirely the effect of the self-induction.

It is preferable on account of the undesirability of using sliding contacts of all kinds to associate the condenser with the armature directly, or make it a part of the armature. In some cases I build up the armature of annular plates K K, held by bolts L between heads M, which are secured to the driving-shaft, and in the hollow space thus formed I place a condenser F, generally by winding the two insulated plates thereof spirally around the shaft. In other cases I utilize the plates of the core itself as the plates of the condenser. For example, in Figs. 3 and 4, N is the driving-shaft, M M are the heads of the armature-core, and K K′ the iron plates of which the core is built up. These plates are insulated from the shaft and from one another, and are held together by rods or bolts L. The bolts pass through a large hole in one plate and a small hole in the one next adjacent, and so on, connecting electrically all of plates K, as one armature of a condenser, and all of plates K′ as the other.

To either of the condensers above described the armature-coils may be connected, as explained by reference to Fig. 1.

In motors in which the armature-coils are closed upon themselves—as, for example, in any form of alternating-current motor in which one armature coil or set of coils is in the position of maximum induction with respect to the field coils or poles, while the other is in the position of minimum induction—the coils are preferably connected in one series, and two points of the circuit thus formed are bridged by a condenser. This is illustrated in Fig. 5, in which E represents one set of armature-coils and E′ the other. Their points of union are joined through a condenser F. It will be observed that in this disposition the self-induction of the two branches E and E′ varies with their position relatively to the field-magnet, and that each branch is alternately the predominating source of the induced current. Hence the effect of the condenser F is twofold. First, it increases the current in each of the branches alternately, and, secondly, it alters the phrase of the currents in the branches, this being the well-known effect which results from such a disposition of a condenser with a circuit, as above described. This effect is favorable to the proper working of the motor, because it increases the flow of current in the armature-circuits due to a given inductive effect, and also because it brings more nearly into coincidence the maximum magnetic effects of the coacting field and armature-poles.

It will be understood, of course, that the causes that contribute to the efficiency of condensers when applied to such uses as above must be given due consideration in determining the practicability and efficiency of the motors. Chief among these is, as is well known, the periodicity of the current, and hence the improvements which I have herein described are more particularly adapted to systems in which a very high rate of alternation or change is maintained.

Although this invention has been illustrated herein in connection with a special form of motor, it will be understood that it is equally applicable to any other alternating-current motor in which there is a closed armature-coil wherein the currents are induced by the action of the field, and, furthermore, I would state that the feature of utilizing the plates or sections of a magnetic core for forming the condenser, I regard as applicable, generally, to other kinds of alternating-current apparatus.

Having now described my invention, what I claim is—

1. In an alternating-current motor, the com-

bination, with the field-magnets and energizing-circuit, of an armature-circuit and a core adapted to be energized by currents induced in its circuit by the currents in the field-circuit, and a condenser connected with the armature-circuit only. as set forth.

2. In an alternating-current motor, the combination, with armature-coils in inductive relation to the field and connected in a closed circuit, of a condenser bridging said circuit, as set forth.

3. In an alternating-current motor, the combination, with an armature and two energizing-circuits formed by coils wound thereon in different inductive relations to the field and joined in a continuous or closed series, of a condenser the plates of which are connected, respectively, to the junctions of the circuits or coils, as set forth.

4. In an alternating-current motor, the combination, with the induced energizing coil or coils of the armature, of a condenser connected therewith and made a part of the armature or rotating element of the motor.

5. In an alternating-current motor, the combination, with an armature-core composed of insulated conducting-plates alternately connected to form a condenser, of an induced energizing coil or coils wound thereon and connected to the plates or armatures of the said condenser.

6. A magnetic core for alternating-current apparatus, composed of plates or sections insulated from each other and alternately connected to form the two parts or armatures of a condenser.

NIKOLA TESLA.

Witnesses:

PARKER W. PAGE,

FRANK B. MURPHY.

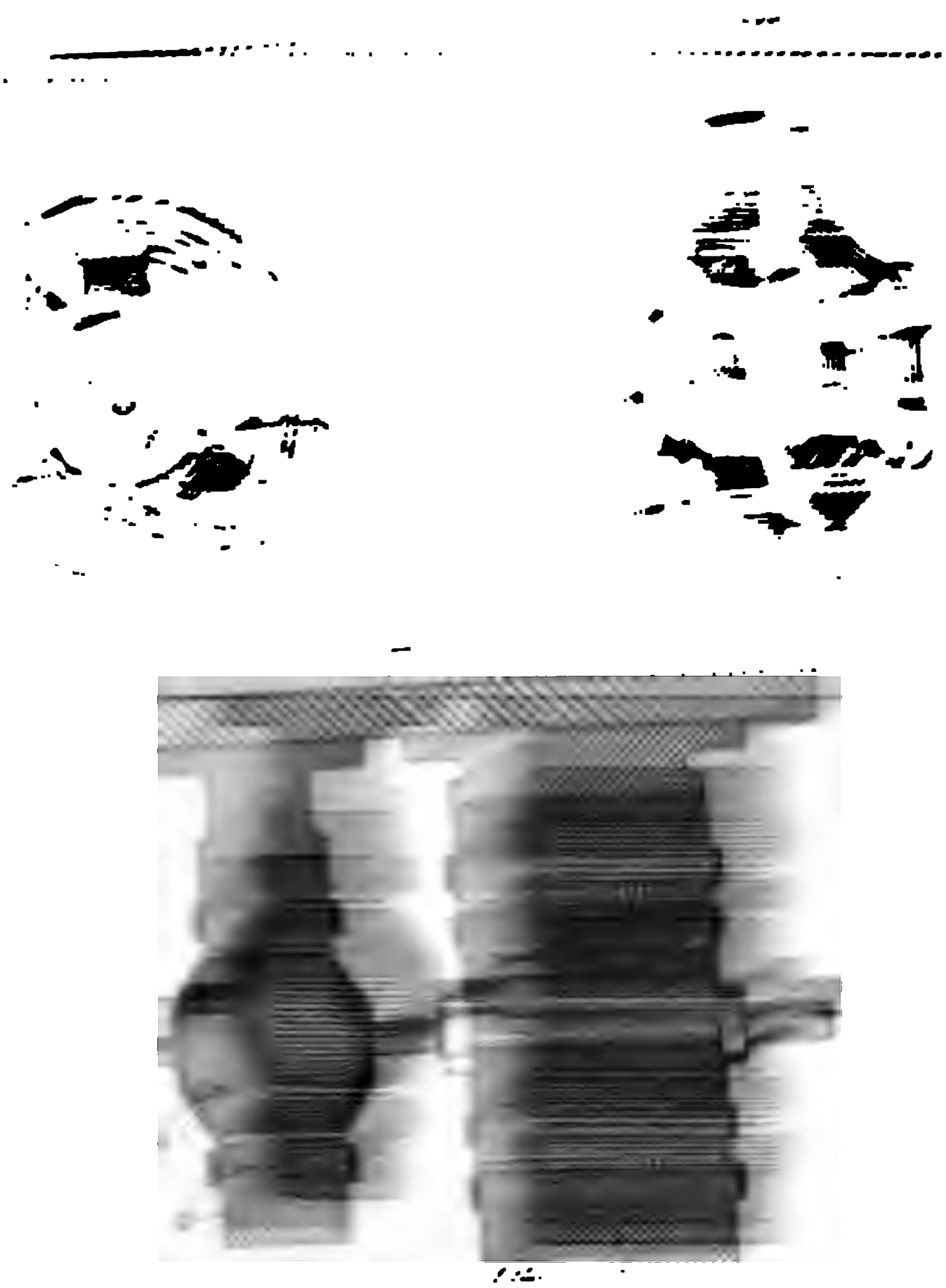

UNITED STATES PATENT OFFICE.

NIKOLA TESLA, OF NEW YORK, N. Y., ASSIGNOR TO THE TESLA ELECTRIC COMPANY, OF SAME PLACE.

ELECTRO-MAGNETIC MOTOR.

SPECIFICATION forming part of Letters Patent No. 459,772, dated September 22, 1891.

Application filed April 6, 1889. Serial No. 306,165. (No model.)

To all whom it may concern:

Be it known that I, NIKOLA TESLA, a subject of the Emperor of Austria, from Smiljan, Lika, border country of Austria-Hungary, residing at New York, in the county and State of New York, have invented certain new and useful Improvements in Electro-Magnetic Motors, of which the following is a specification, reference being had to the drawings accompanying and forming a part of the same.

As is well known, certain forms of alternating-current machines have the property, when connected in circuit with an alternating-current generator, of running as a motor in synchronism therewith; but while the alternating current will run the motor after it has attained a rate of speed synchronous with that of the generator it will not start it. Hence in all instances heretofore when these "synchronizing motors," as they are termed, have been run, some means have been adopted to bring the motors up to synchronism with the generator, or approximately so, before the alternating current of the generator is applied to drive them.

In an application filed February 18, 1889, Serial No. 300,220, I have shown and described an improved system of operating this class of motors, which consists, broadly, in winding or arranging the motor in such manner that by means of suitable switches it could be started as a multiple-circuit motor, or one operating by a progression of its magnetic poles, and then, when up to speed, or nearly so, converted into an ordinary synchronizing motor, or one in which the magnetic poles were simply alternated. In some cases, as when a large motor is used and when the number of alternations is very high, there is more or less difficulty in bringing the motor to speed as a double or multiple-circuit motor, for the plan of construction which renders the motor best adapted to run as a synchronizing motor impairs its efficiency as a torque or double-circuit motor under the assumed conditions on the start. This will be readily understood, for in a large synchronizing motor the length of the magnetic circuit of the polar projections and their mass are so great that apparently considerable time is required for magnetization and demagnetization. Hence with a current of a very high number of alternations the motor may not respond properly. To avoid this objection and to start up a synchronizing motor in which these conditions obtain is the object of my present invention. I have therefore combined two motors, one a synchronizing motor, the other a multiple-circuit or torque motor, and by the latter I bring the first named up to speed, and then either throw the whole current into the synchronizing motor or operate jointly both of the motors.

This invention involves several novel and useful features. It will be observed, in the first place, that both motors are run without commutators of any kind, and, secondly, that the speed of the torque motor may be higher than that of the synchronizing motor, as will be the case when it contains a fewer number of poles or sets of poles, so that the motor will be more readily and easily brought up to speed. Thirdly, the synchronizing motor may be constructed so as to have a much more pronounced tendency to synchronism without lessening the facility with which it is started.

In the drawings I have illustrated the invention.

Figure 1 is a part sectional view of the two motors; Fig. 2, an end view of the synchronizing motor; Fig. 3, an end view and part section of the torque or double-circuit motor; Fig. 4, a diagram of the circuit connections employed; and Figs. 5, 6, 7, 8, and 9 are diagrams of modified dispositions of the two motors.

Inasmuch as neither motor is doing any work while the current is acting upon the other, I prefer to rigidly connect the two armatures. I therefore mount both upon the same shaft A, the field-magnets B of the synchronizing and C of the torque motor being secured to the same base D. The preferably larger synchronizing motor has polar projections on its armature, which rotate in very close proximity to the poles of the field, and in other respects it conforms to the conditions, now well understood, that are necessary to secure synchronous action. I prefer, however, to wind the pole-pieces of the armature with closed coils E, as this obviates the employment of sliding contacts. The smaller or

torque motor, on the other hand, has, preferably, a cylindrical armature F, without polar projections and wound with closed coils G, as I have described in my previous patents, notably No. 382,279, dated May 1, 1888. The field-coils of the torque motor are connected up in two series H and I, and the alternating current from the generator is directed through or divided between these two circuits in any manner to produce a progression of the poles or points of maximum magnetic effect. I secure this result in a convenient way by connecting the two motor-circuits in derivation with the circuit from the generator, inserting in one motor-circuit a dead resistance and in the other a self-induction coil, by which means a difference in phase between the two divisions of the current is secured. If both motors have the same number of field-poles, the torque motor for a given number of alternations will tend to run at double the speed of the other, for, assuming the connections to be such as to give the best results, its poles are divided into two series and the number of poles is virtually reduced one-half, which being acted upon by the same number of alternations tend to rotate the armature at twice the speed. By this means the main armature is more easily brought to or above the required speed. When the speed necessary for synchronism is imparted to the main motor, the current is shifted from the torque motor into the other.

A convenient arrangement for carrying out this invention is shown in Fig. 4. In said figure J J are the field-coils of the sychronizing, and H I the field-coils of the torque, motor. L L′ are the conductors of the main line. One end of, say, coils H is connected to wire L through a self-induction coil M. One end of the other set of coils I is connected to the same wire through a dead resistance N. The opposite ends of these two circuits are connected to the contact *m* of a switch the handle or lever of which is in connection with the line-wire L′. One end of the field-circuit of the synchronizing motor is connected to the wire L. The other terminates in the switch-contact *n*. From the diagram it will be readily seen that if the lever P be turned onto contact *m* the torque motor will start by reason of the difference of phase between the currents in its two energizing-circuits. Then when the desired speed is attained if the lever P be shifted onto contact *n* the entire current will pass through the field-coils of the synchronizing motor and the other will be doing no work.

The torque motor may be constructed and operated in various ways, many of which I have described in other applications; but I do not deem it necessary in illustration of the principle of construction and mode of operation of my present invention to describe these further herein. It is not necessary that one motor be cut out of circuit while the other is in, for both may be acted upon by the current at the same time, and I have devised various dispositions or arrangements of the two motors for accomplishing this. Some of these arrangements are illustrated in Figs. 5 to 9.

Referring to Fig. 5, let T designate the torque or multiple-circuit motor and S the synchronizing motor, L L′ being the line-wires from a source of alternating current. The two circuits of the torque motor of different degrees of self-induction, and designated by N M, are connected in derivation to the wire L. They are then joined and connected to the energizing-circuit of the synchronizing motor, the opposite terminal of which is connected to wire L′. The two motors are thus in series. To start them I short-circuit the synchronizing motor by a switch P′, throwing the whole current through the torque motor. Then when the desired speed is reached the switch P′ is opened, so that the current passes through both motors. In such an arrangement as this it is obviously desirable for economical and other reasons that a proper relation between the speeds of the two motors should be observed.

In Fig. 6 another disposition is illustrated. S is the synchronizing motor and T the torque motor, the circuits of both being in parallel. W is a circuit also in derivation to the motor-circuits and containing a switch P″. S′ is a switch in the synchronizing-motor circuit. On the start the switch S′ is opened, cutting out the motor S. Then P″ is opened, throwing the entire current through the motor T, giving it a very strong torque. When the desired speed is reached, switch S′ is closed and the current divides between both motors. By means of switch P″ both motors may be cut out.

In Fig. 7 the arrangement is substantially the same, except that a switch T′ is placed in the circuit which includes the two circuits of the torque motor.

Fig. 8 shows the two motors in series, with a shunt around both containing a switch S T. There is also a shunt around the synchronizing motor S, with a switch P′.

In Fig. 9 the same disposition is shown; but each motor is provided with a shunt, in which are switches P′ and T″, as shown.

The manner of operating the systems will be understood from the foregoing descriptions.

I do not claim herein the torque motor nor any part thereof, except in so far as they enter into the combination which forms the subject of this application, for I have made the distinguishing features of said motor the subject of other applications.

What I now claim is—

1. An alternating-current non-synchronizing electric motor coupled with a synchronizing alternating-current motor, substantially as set forth, whereby the former starts the latter and throws it into synchronism with

its actuating-current, and switch mechanism for directing the current through either or both of the motors, as set forth.

2. The combination of two motors the armatures of which are mounted upon the same shaft, one of said motors being an alternating-current torque motor, or one in which the magnetic points or poles are progressively shifted by the action of the energizing-current, the other motor being an alternating-current synchronizing motor, and switch mechanism for directing the current through either or both of said motors, as set forth.

3. The combination, with an alternating-current synchronizing motor having one energizing-field, of an alternating-current torque motor having a plurality of energizing-circuits and adapted to be operated by currents differing in phase, and a switch for directing the alternating current or currents through the several circuits of one motor or the single circuit of the other, as and for the purpose set forth.

4. The combination, with an alternating-current motor having field-cores wound with coils adapted to be connected to a source of alternating currents and an armature wound with induced coils closed upon themselves, of a starting device for bringing said motor into synchronism with the generator with which it is connected.

5. The combination, with an alternating-current motor composed of a multipolar alternating field-magnet, and an armature having poles wound with coils closed upon themselves, of a starting device, as set forth.

6. In an alternating-current motor, the combination of a field-magnet having poles wound with coils adapted when connected with a source of alternating current to produce simultaneously opposite magnetic polarities and an armature provided with poles or projections and wound with coils connected in a continuously-closed unconnected circuit, as set forth.

7. The herein-described method of operating alternating-current motors, which consists in actuating a motor by an alternating current to bring a second alternating-current motor up to synchronizing speed relative to the actuating-current and then switching the synchronizing motor into circuit.

NIKOLA TESLA.

Witnesses:

GEORGE N. MONRO,

EDWARD T. EVANS

(No Model.)

N. TESLA.

ELECTRO MAGNETIC MOTOR.

No. 464,666. Patented Dec. 8, 1891.

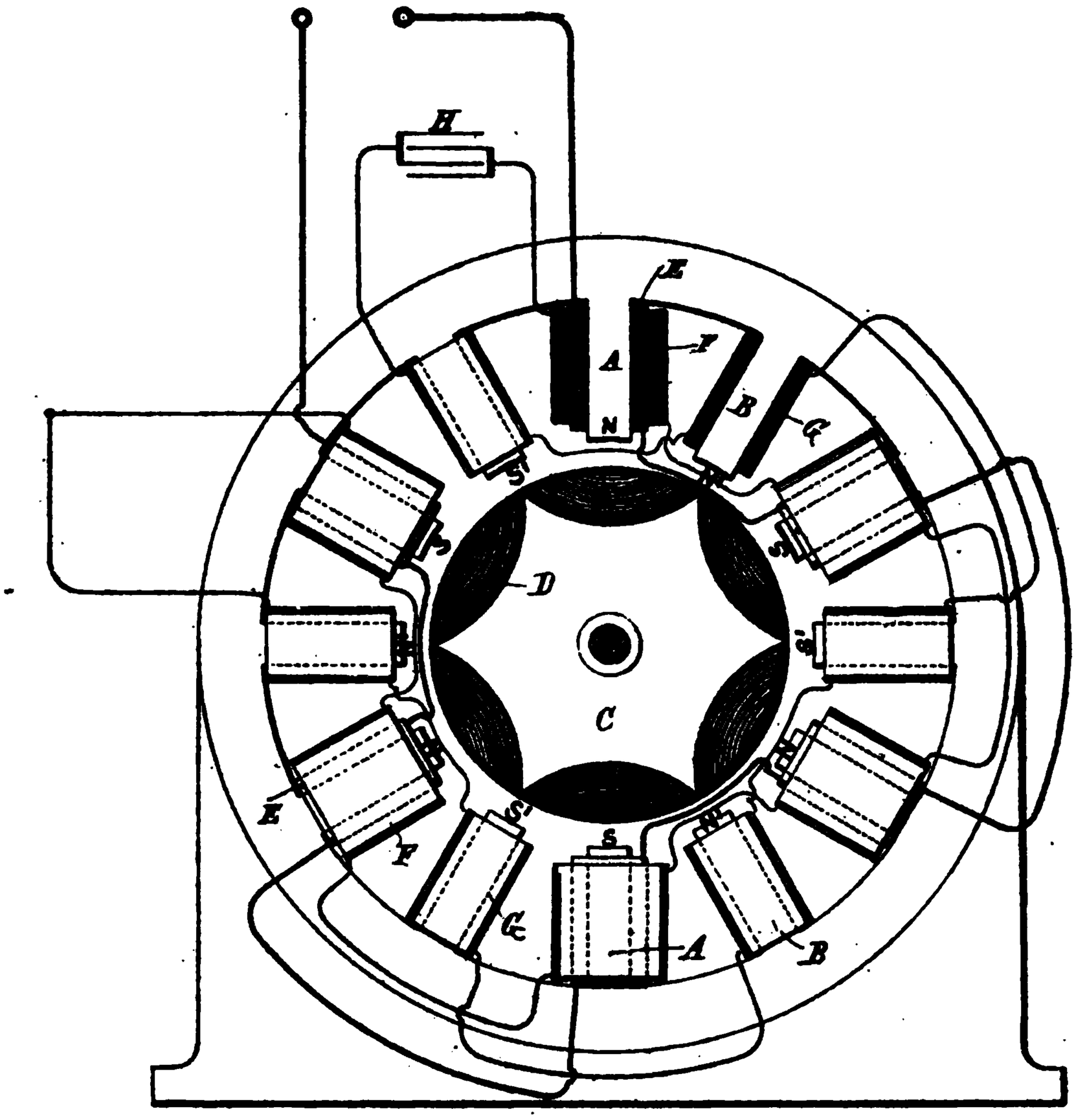

Witnesses:
Raphael Netter
Frank B. Murphy

Inventor
Nikola Tesla
by
Duncan & Page.
Attorneys

(No Model.)

N. TESLA.

ELECTRIC MACHINE MOTOR.

No. 464,566. Patented [illegible]

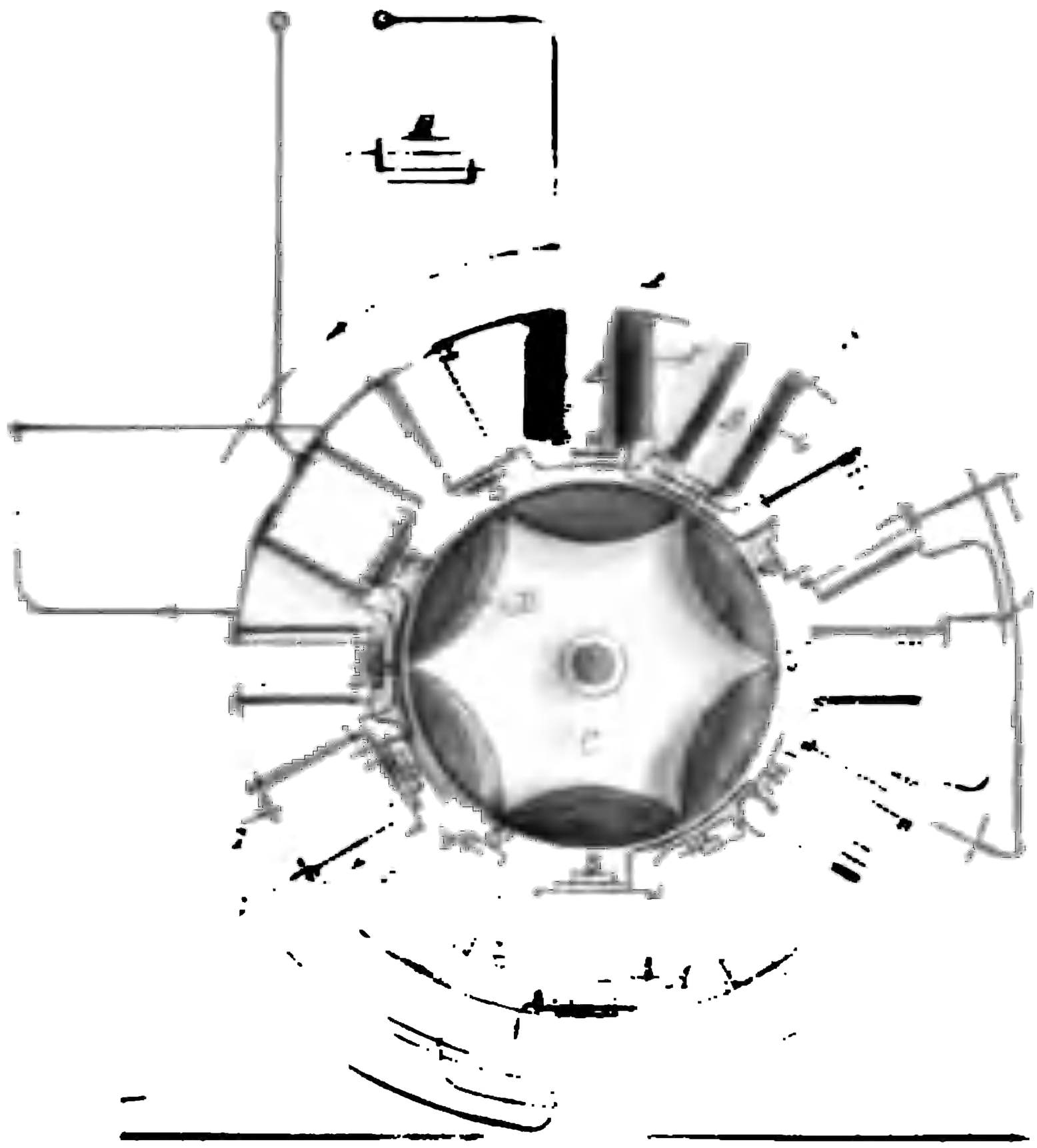

Witnesses.

[illegible]

Inventor

Nikola Tesla

[illegible]

rents. As the condenser capacity which is needed in any particular motor of this kind is dependent upon the rate of alternation or the potential, or both, its size or cost, as before explained, may be brought within economical limits for use with the ordinary circuits if the potential of the secondary circuit in the motor be sufficiently high. By giving to the condenser proper values any desired difference of phase between the primary and secondary energizing-circuits may be obtained.

What I claim is—

1. In an alternating-current motor provided with two or more energizing or field circuits, one of which is adapted for connection with a source of currents and the other or others in inductive relation thereto, the combination, with the secondary or induced circuit or circuits, of a condenser interposed in the same, as set forth.

2. In an alternating-current motor, the combination of two energizing-circuits, one connected or adapted for connection with a source of alternating currents, the other constituting a high-potential secondary circuit in inductive relation to the first, and a condenser interposed in said secondary circuit, as set forth.

NIKOLA TESLA.

Witnesses:
ROBT. F. GAYLORD,
ERNEST HOPKINSON.

rents. As the condenser capacity which is needed in any particular motor of this kind is dependent upon the rate of alternation or the potential, or both, its size or cost, as before explained, may be brought within economical limits for use with the ordinary circuits if the potential of the secondary circuit in the motor be sufficiently high. By giving to the condenser proper values any desired difference of phase between the primary and secondary energizing-circuits may be obtained.

What I claim is—

1. In an alternating-current motor provided with two or more energizing or field circuits, one of which is adapted for connection with a source of currents and the other or others in inductive relation thereto, the combination, with the secondary or induced circuit or circuits, of a condenser interposed in the same, as set forth.

2. In an alternating-current motor, the combination of two energizing-circuits, one connected or adapted for connection with a source of alternating currents, the other constituting a high-potential secondary circuit in inductive relation to the first, and a condenser interposed in said secondary circuit, as set forth.

NIKOLA TESLA.

Witnesses:
ROBT. F. GAYLORD,
ERNEST HOPKINSON.